Advanced Robotics Applications

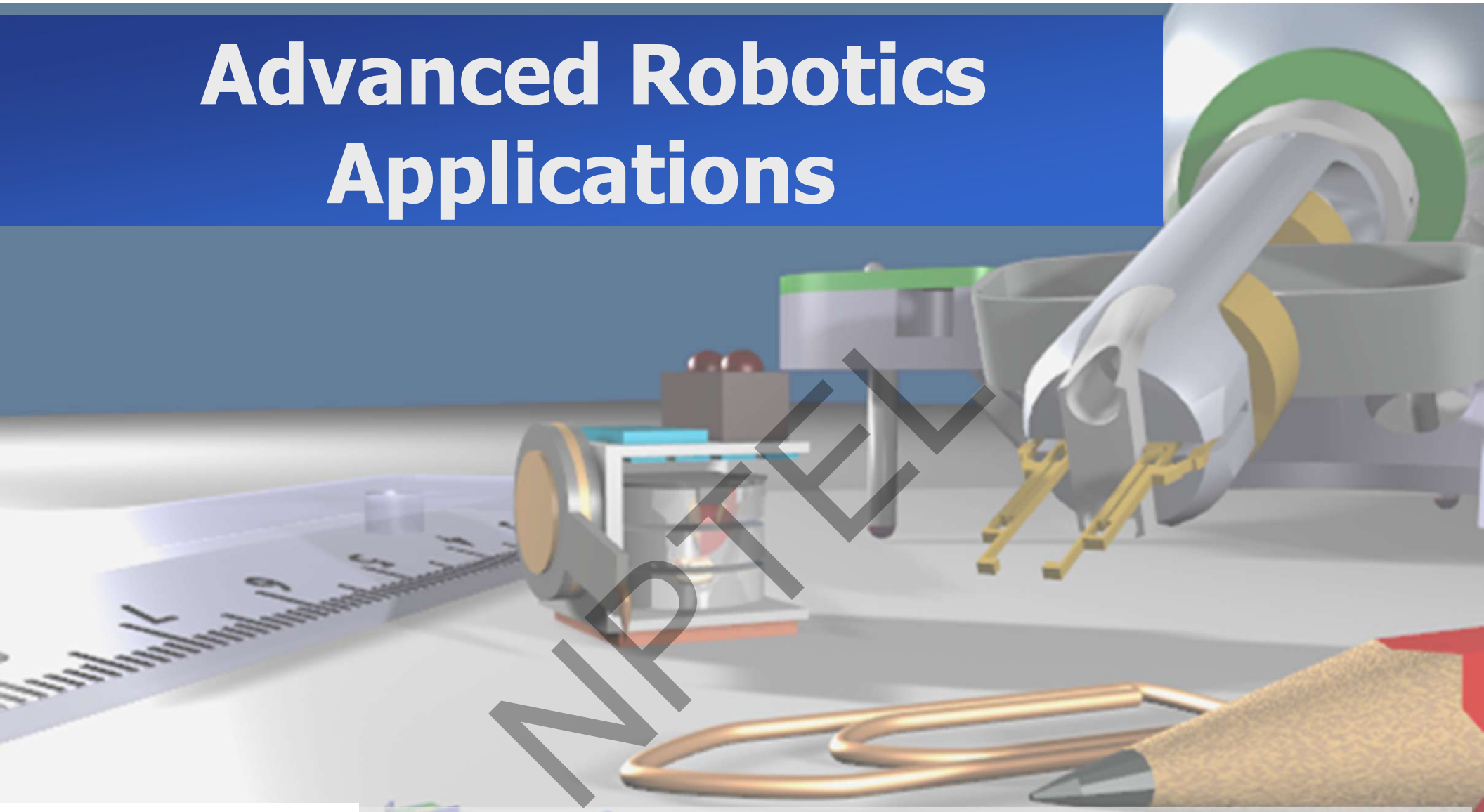

NPTEL

Dr. Ashish Dutta

Professor

Dept. of Mechanical Engineering

IIT Kanpur, INDIA

Brief outline

- 8 weeks course

2 hrs 30 min

- 20 hours of lectures and tutorials
- Queries will be answered by instructors/TAs online/email.
- Assignments each week
- Final exam at the end.

NPTEL

Course outline:

- Introduction to robotics
- Joints, work volume, transformations
- DH parameters
- Forward and Inverse Kinematics
- Sensors, actuators
- Basics of linear control
- Microcontrollers : sensor I/O, Servo motor control
- Experiments : 2 DOF planer arm, 5 Bar 2 DOF robot
- Mobile robotic systems
- Gait , Biped locomotion
- Industrial robot : PUMA, Svaya applications.

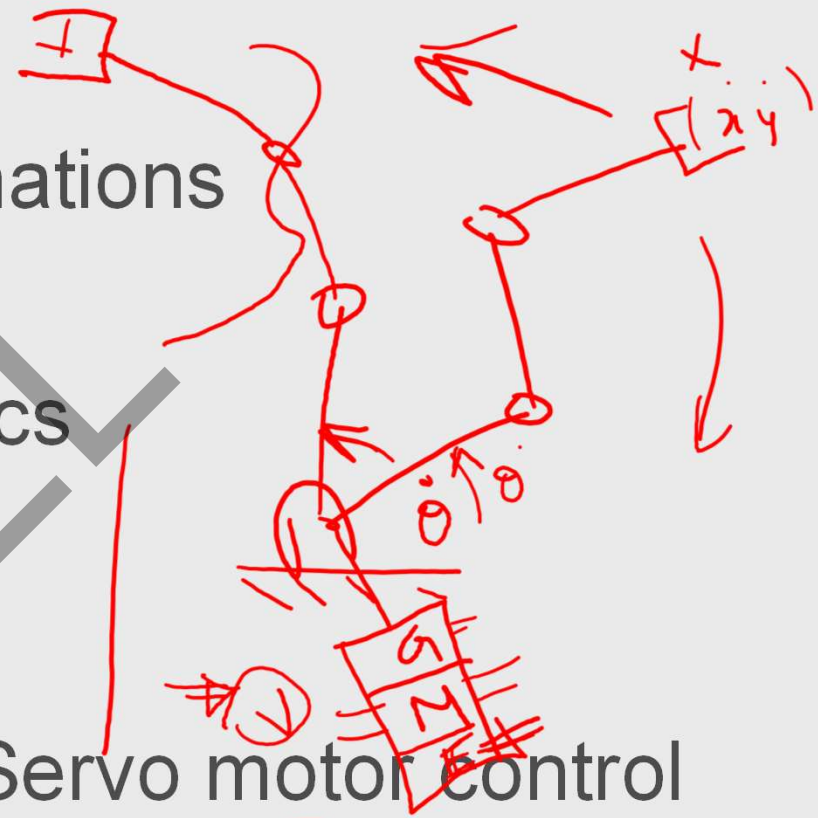

NPTEL

What comes to your mind when you first hear or think of a robot ?

- Mechanical machines ?
- Companions / friends
- Pets / toys
- Helpers
- Dangerous machines

NPTEL

Industrial Robot Arms ?

1960

PAST

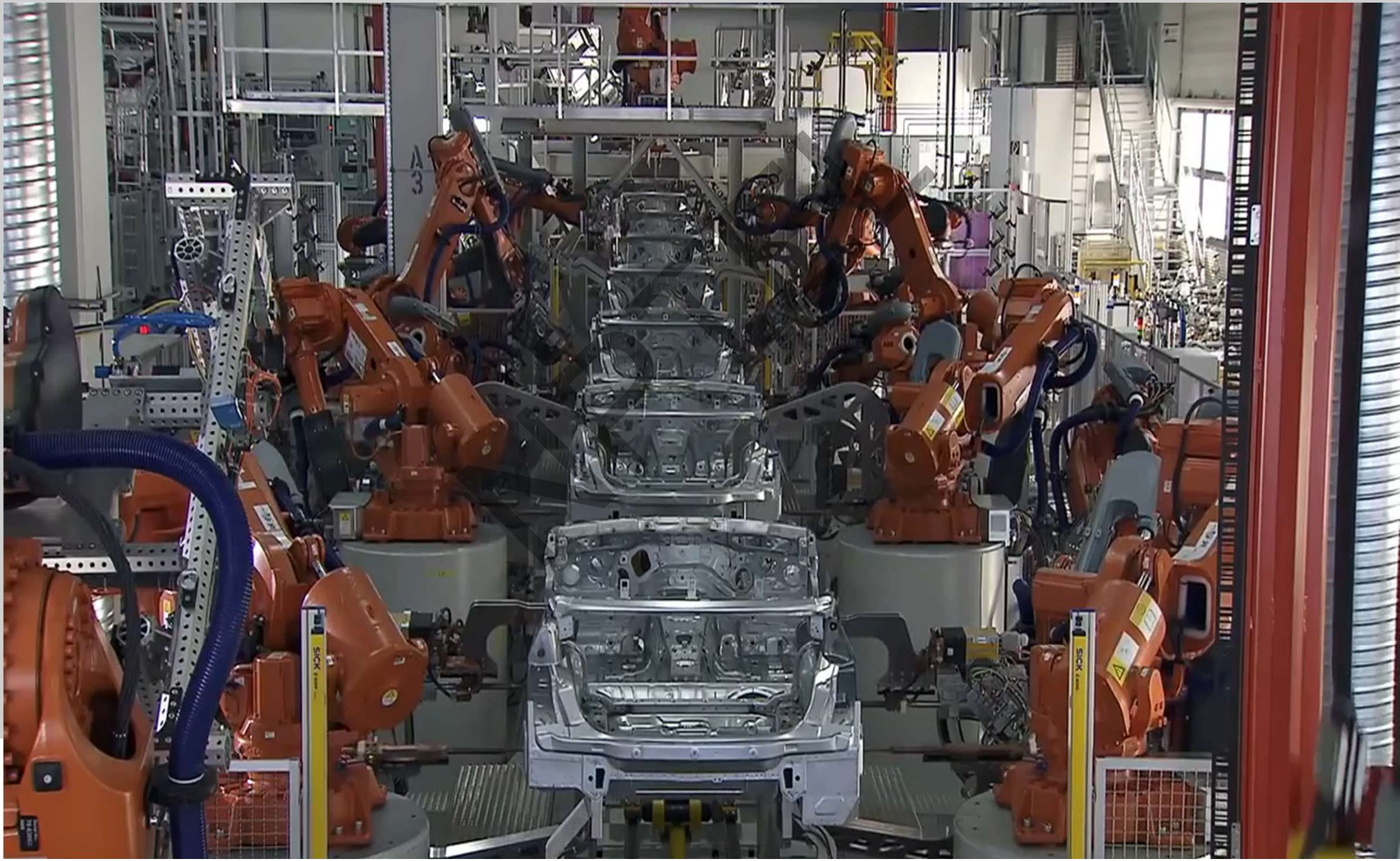

Present - Life of an amazon robot !

Social robots

cobots

Chatbots

FUTURE !

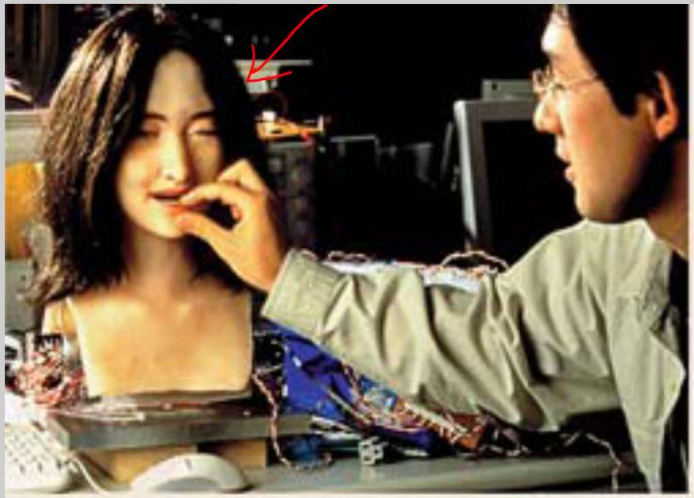

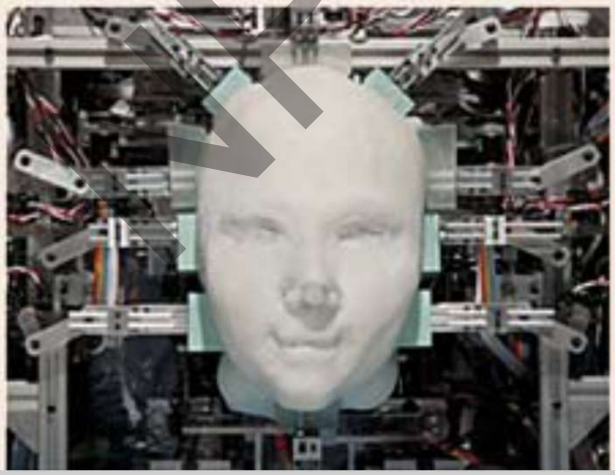

NPTEL

What will be the gender of the robot?

- Male
- Female
- Neutral

NPTEL

What laws should be applicable to robots interacting with humans ?

Origin of Automation:
replacing human muscle power

- 10,000 BC Stone tools used in early civilization: *tools make better tools*.

- Design of simple automation (150 BC) moving engine, Herons door etc. in Greece.

- 1780 AD saw the creation of automatic dolls which could write, draw pictures etc.

- Punch cards used in power looms in France in 1801 for manufacture of textiles Joseph-Marie-Jacquard.

NPTEL

Automation in ancient Greece (150 BC)

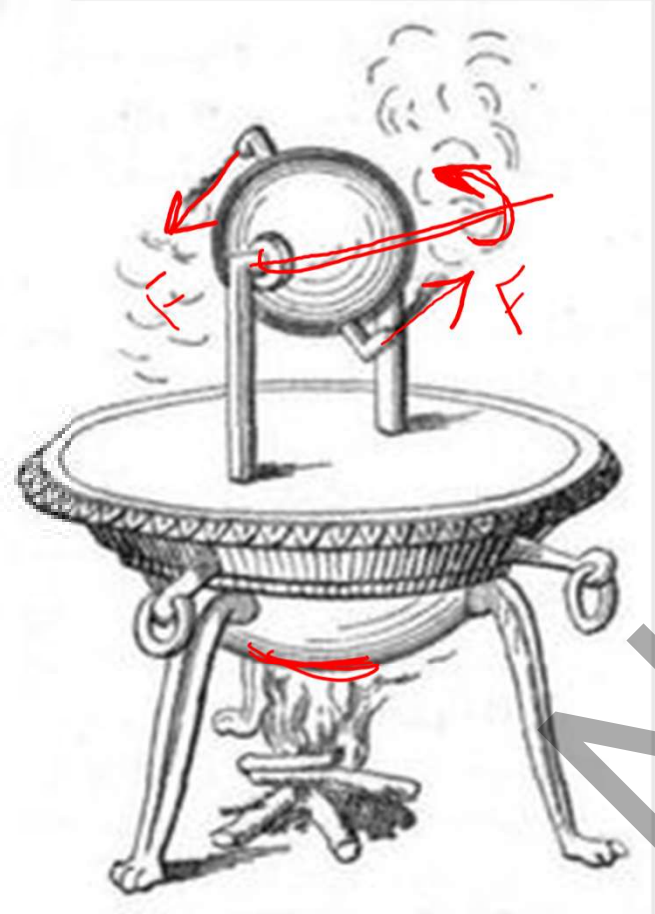

Steam engine

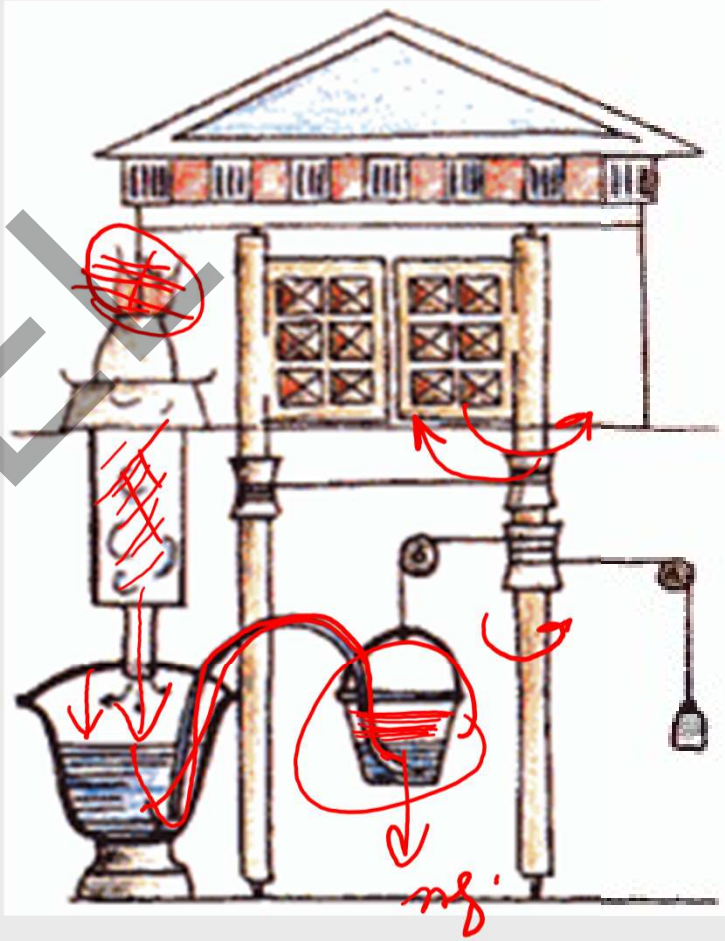

Herons Door

NPTEL

Programmed textile loom: 1801 in France

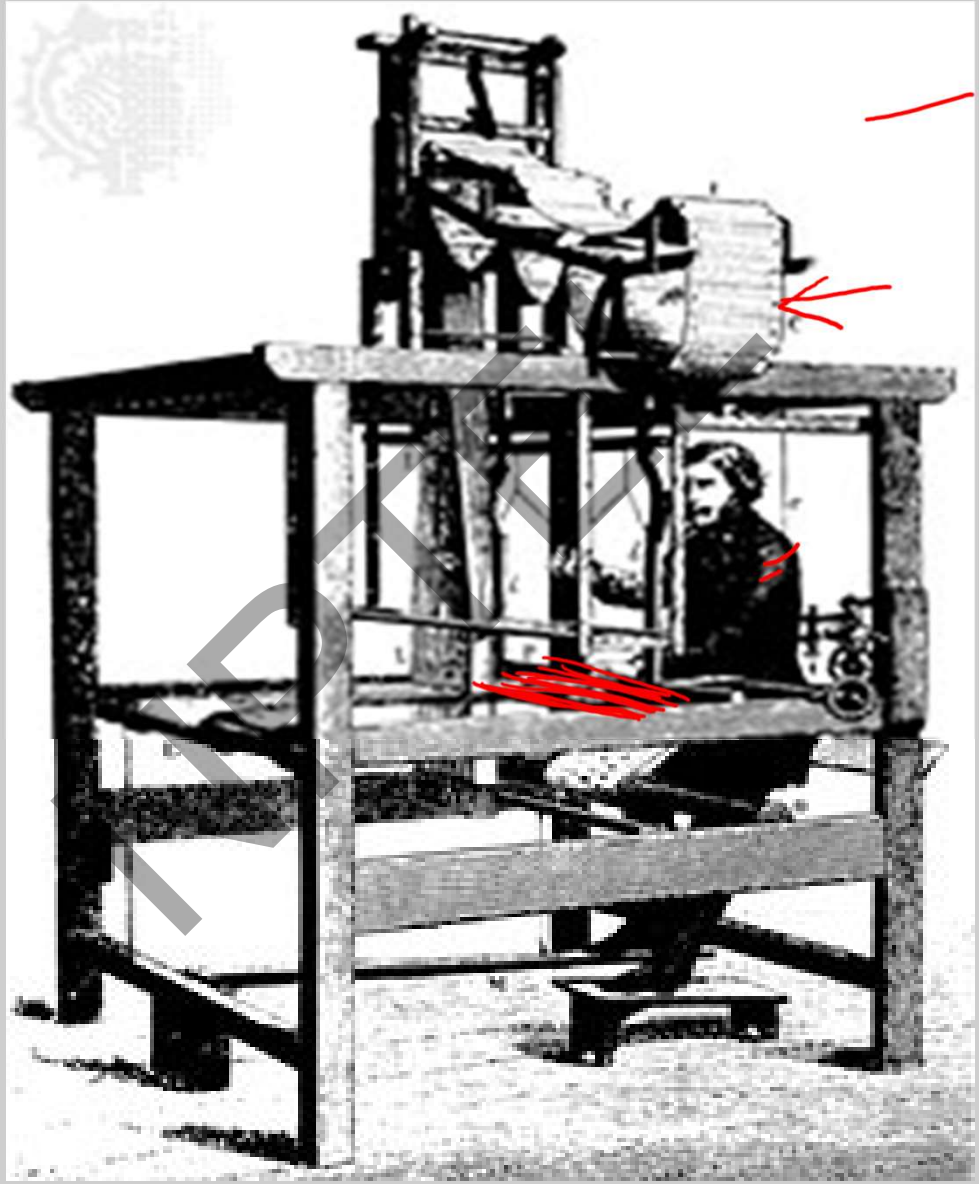

Hard Automation in Ford Motor Company 1904

- Idea of transfer lines in which a car was assembled at different stations.
- First use of hard automation – alignment devices, transfer devices etc.
- 1904 Henry Ford's mass production of vehicles in the USA.

NPTEL

Just for History !

- 1921 Karel Kapec's play depicting human like mechanical man (slave) - robots.

- 1942 Isaac Asimov first used the term *Robotics.*

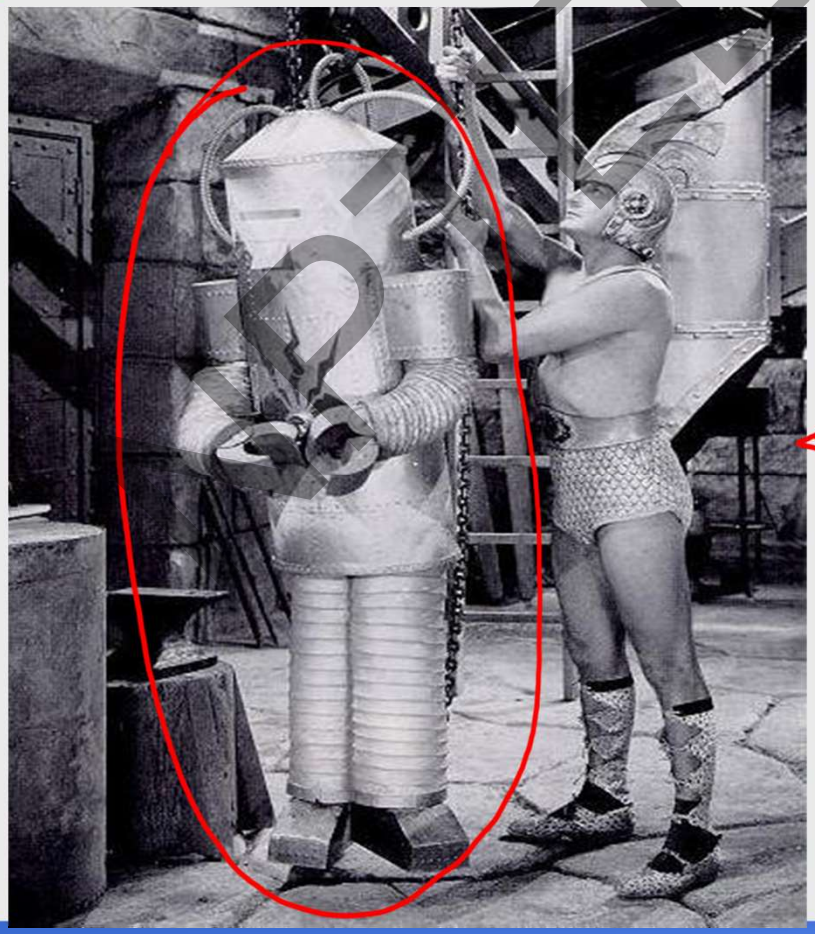

Origin of robots

- 1945 master slave manipulator made for radioactive material handling for the Atom Bomb project.

A strictly mechanical device

Motion transfer by wire rope and pulleys

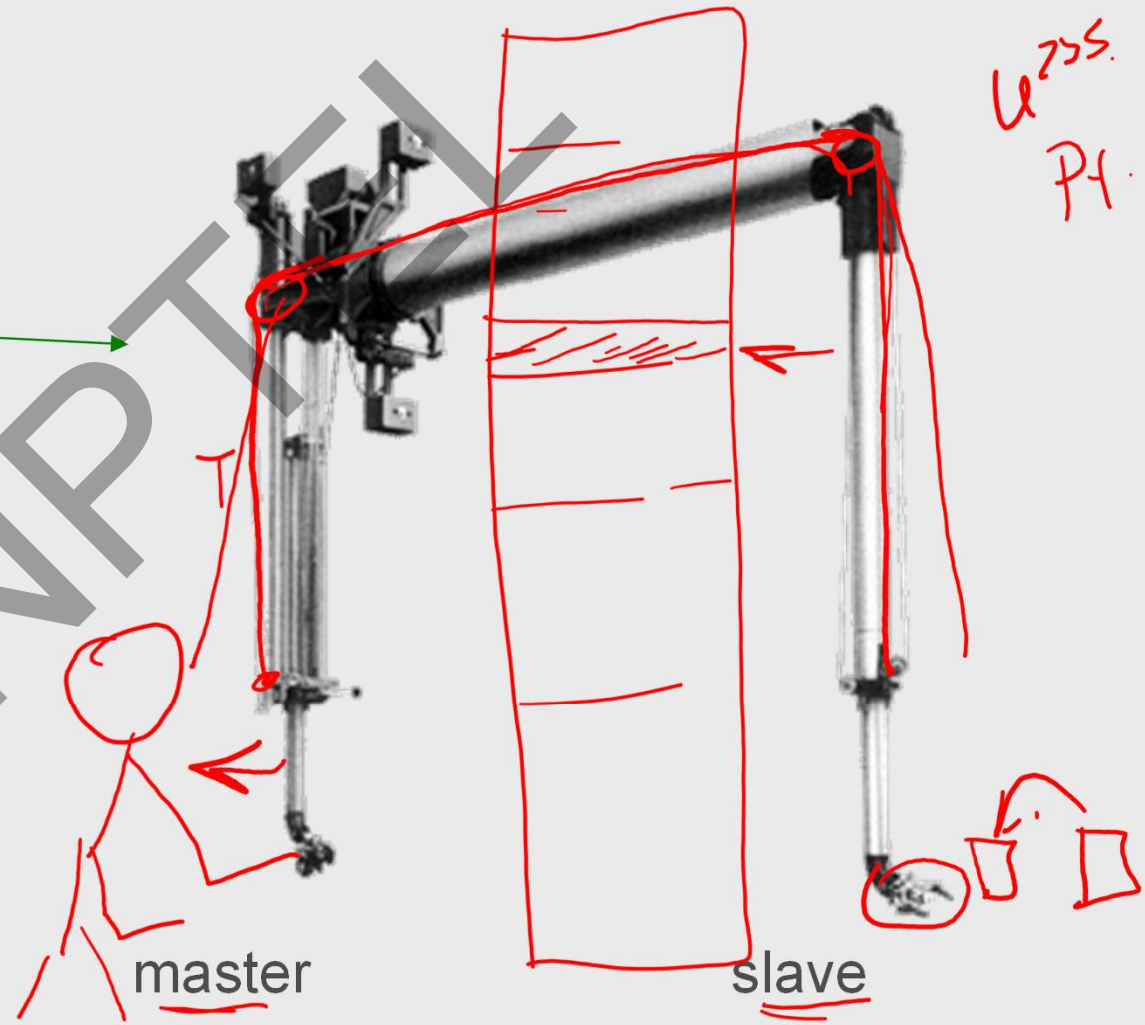

NPTEL

What changed everything ?

- Mechanical systems became electro-mechanical !

NPTEL

What changed everything?

Transistor - (1949) : concept of reprogram!

Controller

Numerical

- 1950 *SHAKY* : First robot-
- 1952 George Dovel : teach / play back devices for NC machines/ robots.

Control.

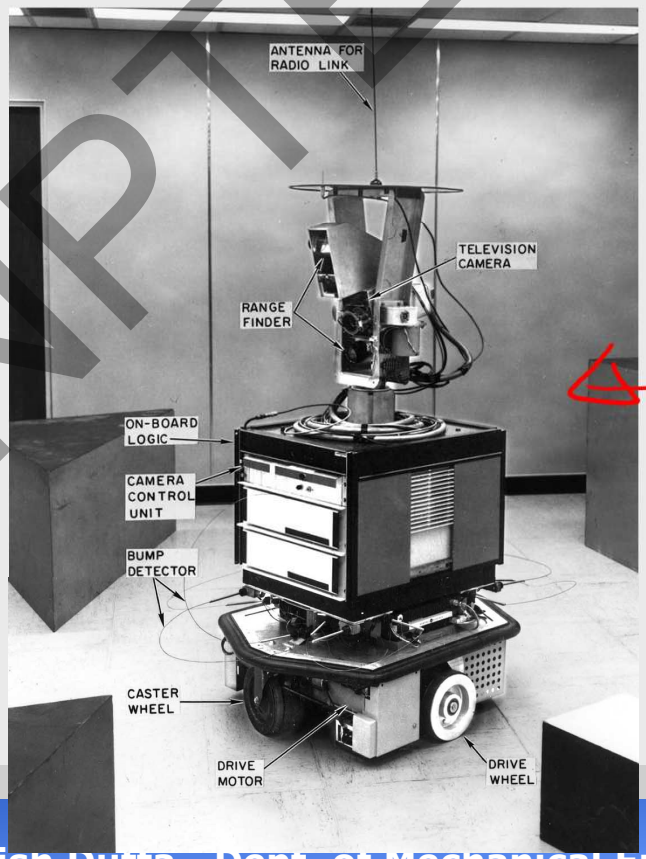

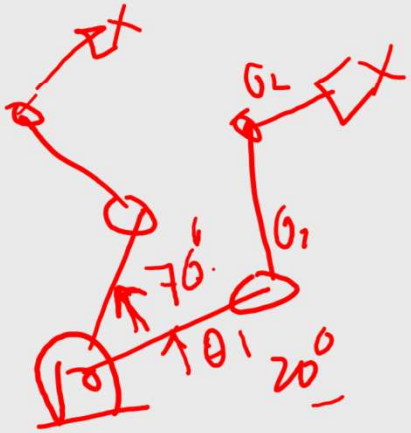

NPTEL

Clumsy *robots* to sophisticated *humanoids*

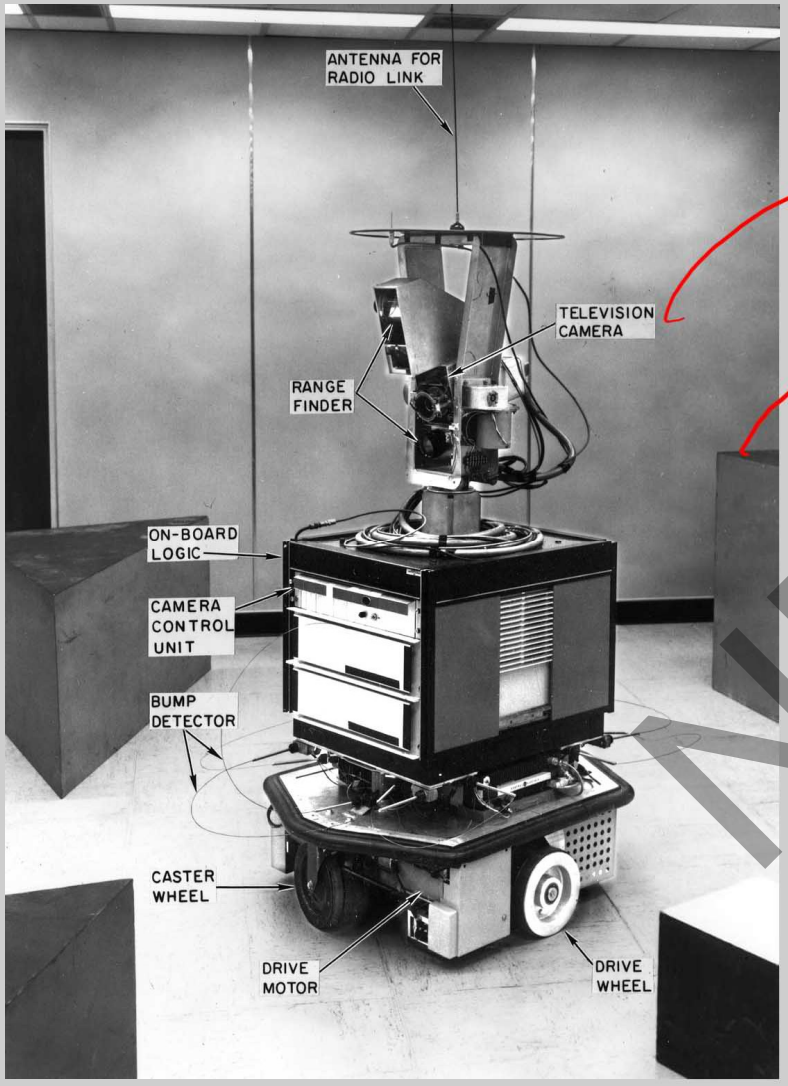

1950

2000 2024

NPTEL

Evolution of NC technology

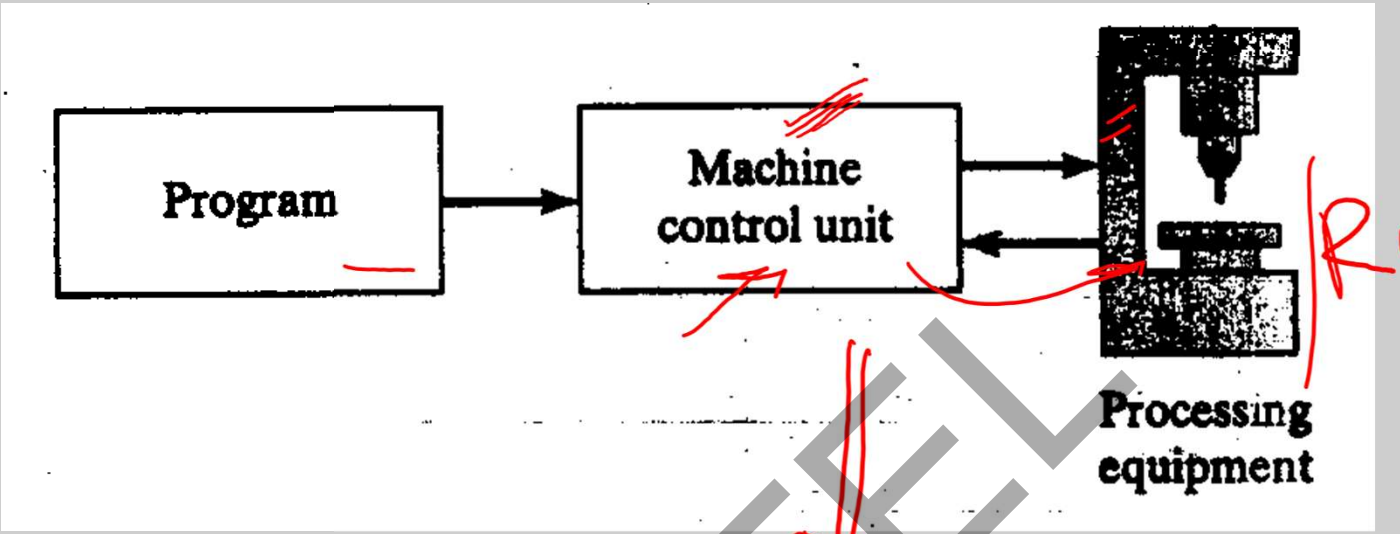

Robot NC

CNC

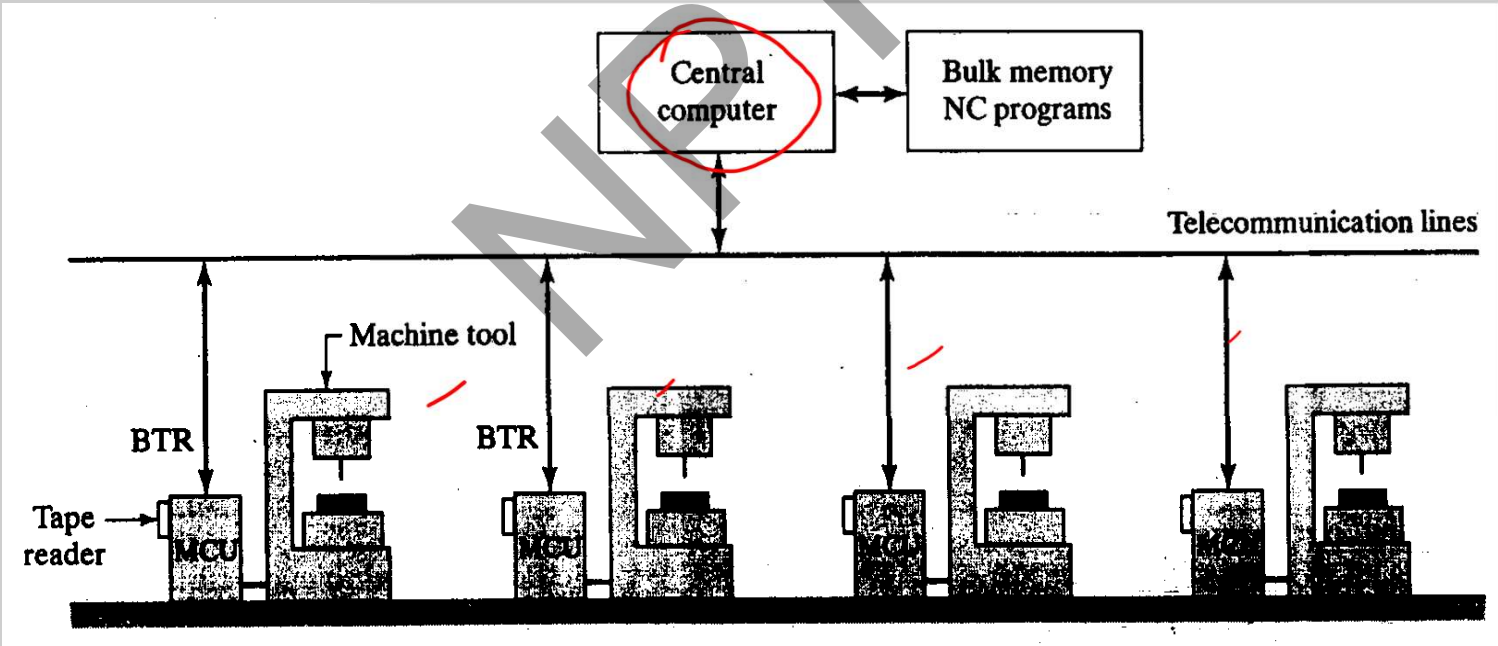

NPTEL

Flexible Manufacturing System

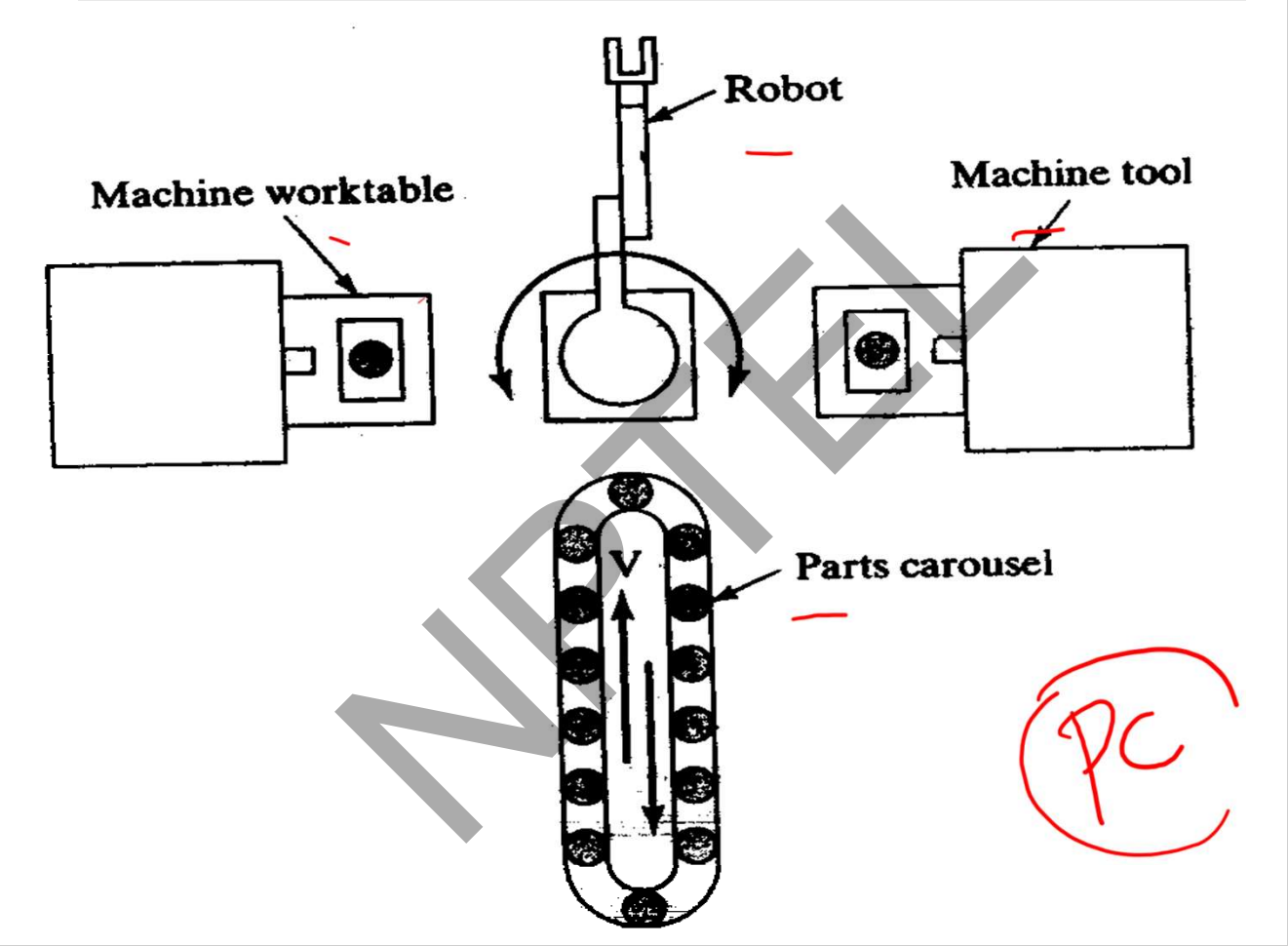

NPTEL

Computer integrated manufacturing

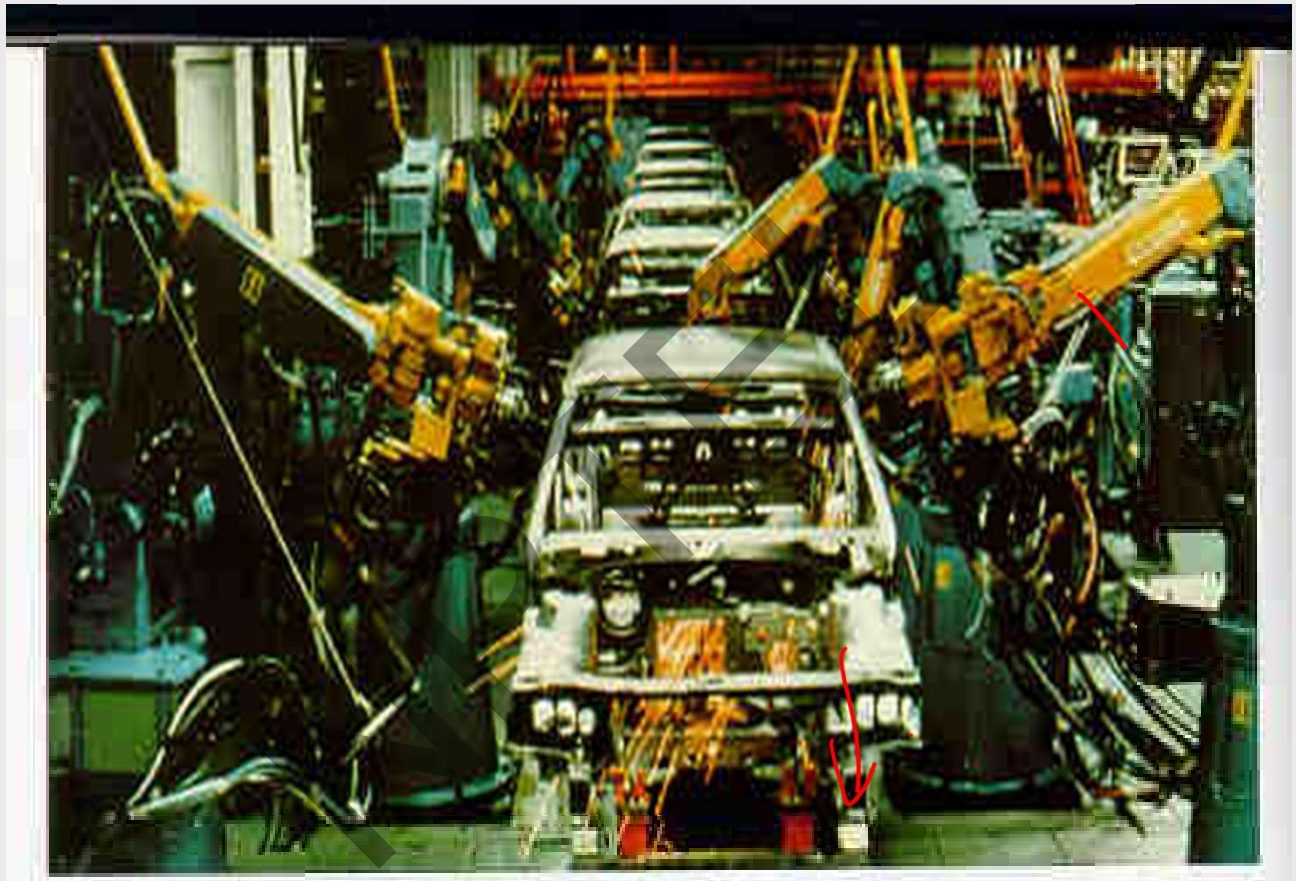

Industrial robots spot weld automobile bodies on an assembly line.

Industry 4.0

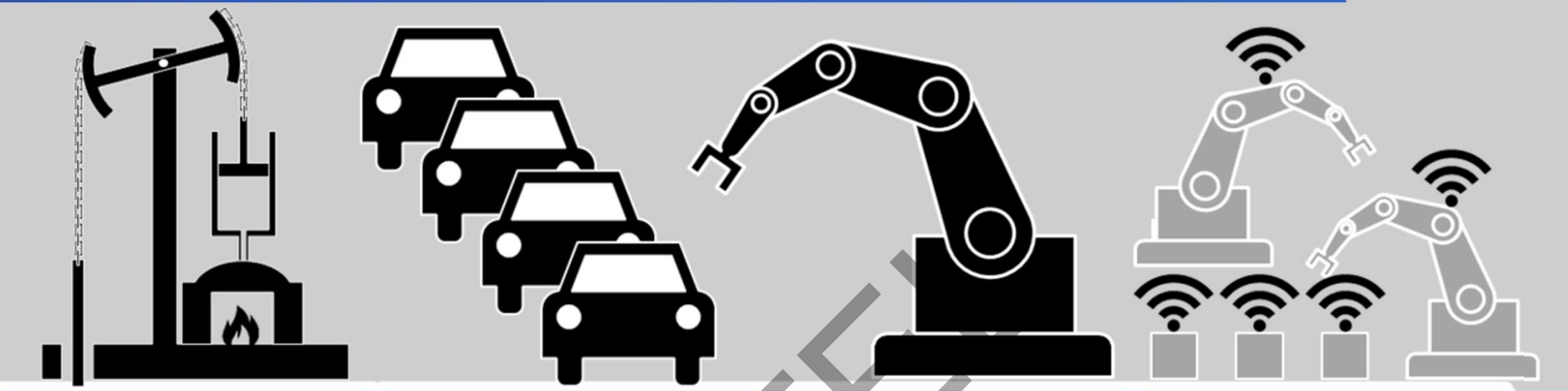

1st	2nd	3rd	4th
Mechanization, water power, steam power	Mass production, assembly line, electricity	Computer and automation	Cyber Physical Systems

Connection involving= machines-humans-AI

NPTEL

What is the definition of a Robot ?

- **Nobody seems to agree** !

- To be called a robot it should do some or all of the following :
  - move around
  - sense and manipulate the environment.
  - display intelligent behavior

Is a CNC machine a Robot ?

NPTEL

Three generations of robotics / engineering

- ***First generation of robots:*** simple pick and place devices with no external sensors.

- ***Second generation robots:*** external Sensors (vision, tactile, etc) for interaction with the environment.

- ***Third generation robots:*** intelligence, smart materials, bio , etc.

- ***Future robots***: bio-robots, micro , nano cybogs, aneroids etc.

NPTEL

First Generation Robots : 1950 – 1970
NC technology

- Simple motion capabilities for pick and place applications

- Robots made of revolute joints actuated by open loop or closed loop control.

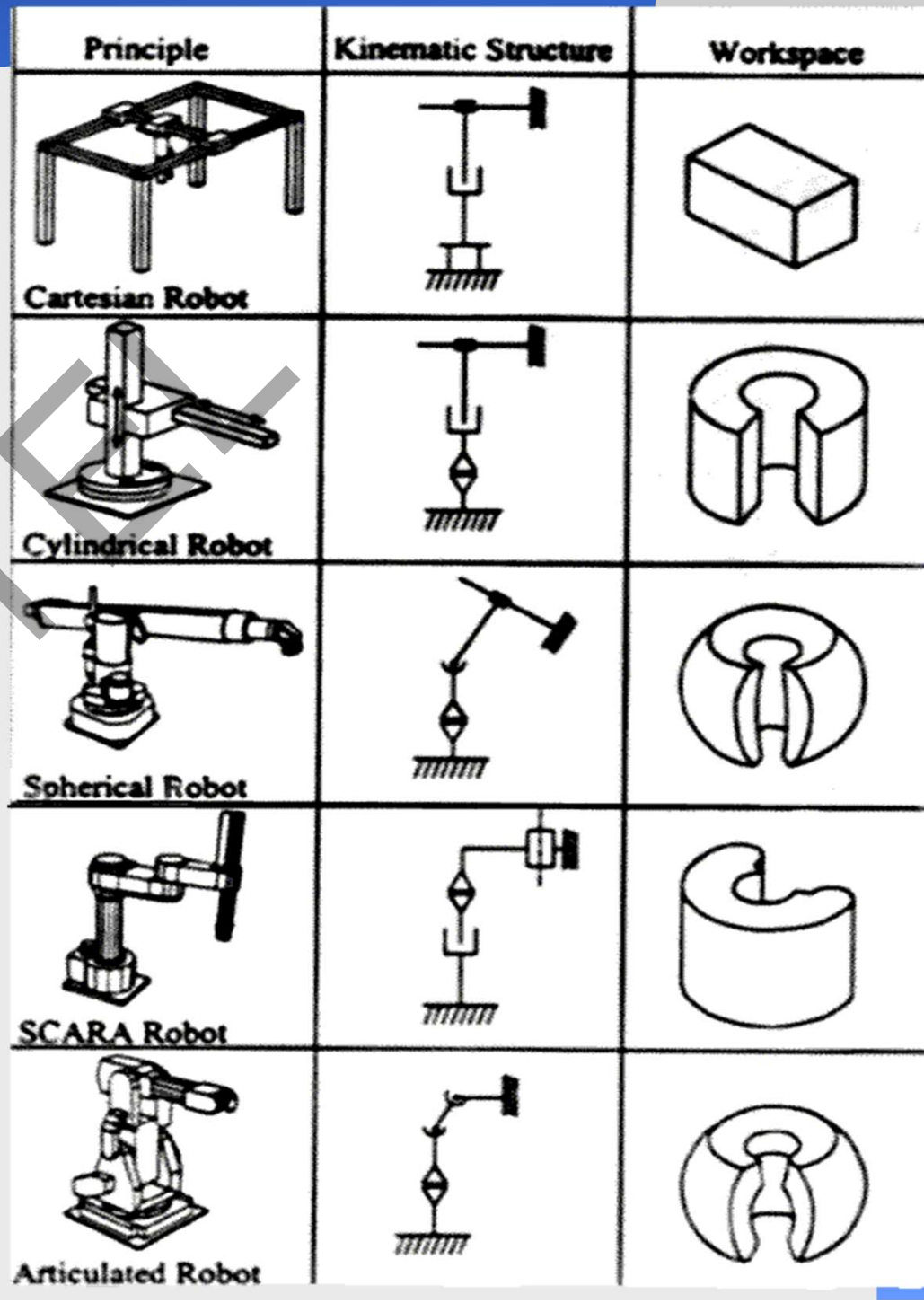

NPTEL

Second generation of robots (1970 ...1990)

Electronics: smaller, faster and cheaper processors

VLSI

- External sensors : interaction with the environment

  - vision
  - advanced sensors : gyros, inclination, force, slip.
  - advanced controllers : microcontroller, DSP
  - speech recognition
  - AI

NPTEL

Third generation robots 1990 - 2000

- New materials – smart materials, smart actuators.
- Interest in emulating biological design paradigms.
- New areas like:

  Micro, Nano-robotics, Vision, bio-robotics, etc.

NPTEL

Future robots --- ????

- Bio-robotics: emulating biology, Micro, Nano.
- Exoskeletons: wearable devices.
- Neuro robotics: cyborgs, aneroids.
- Robotic drugs : nano robots for curing diseases, surgery.
- Assistive / Rehabilitation robotics.
- Outer space / nuclear applications
- Defense: soldier, autonomous armaments.
- Replacement of body functions: artificial muscles.
- IOT, CPS
- ????

NPTEL

Future ?? 2016 –
Micro robot 'drugs' to cure diseases

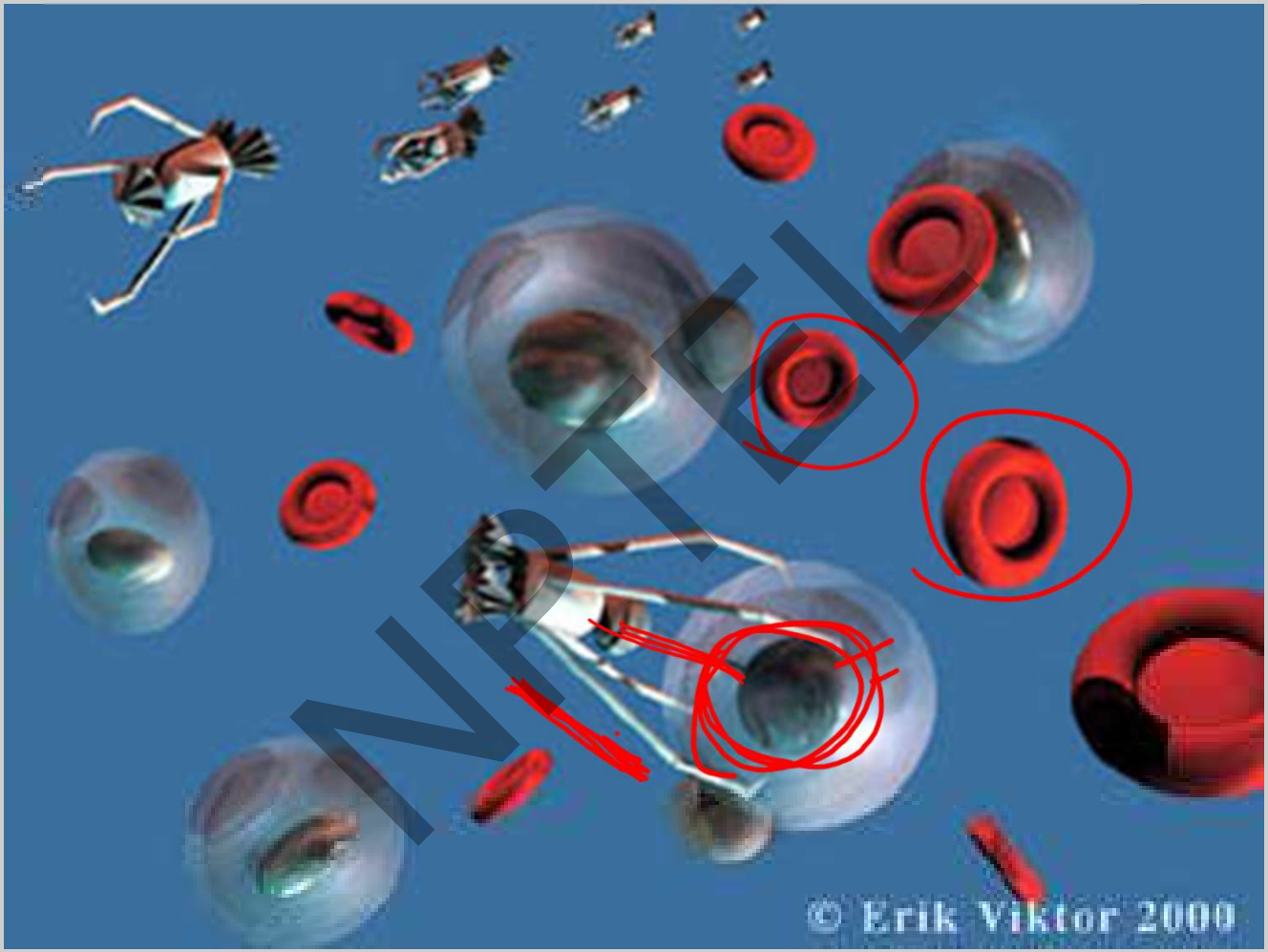

NPTEL

Fig. Killing viruses or bacteria

Micro – Robot Surgeon for bypass surgery!

Nanorobots

Technology is shrinking fast. Computing technology that would have filled a warehouse 30 years ago can now be squeezed onto a chip a fraction of the size of your thumbnail. The very smallest scale of engineering is called nanotechnology. A nanometer is a billionth of a meter, about the width of ten atoms. Nanotechnology may, one day, be capable of producing fully working robots to that scale, called nanorobots or nanobots. Working at an almost atomic level, nanobots could build complex items cheaply and repair clothes, equipment, and even people without being noticed. They could also be used to rid the atmosphere of pollution and to repair holes in the ozone layer.

Bottom up
Researchers are looking at different ways to construct nanobots. The "bottom up" approach uses individual atoms and molecules as building blocks. This stick figure was created from just 28 carbon monoxide molecules.

A mere wisp
A row of 20,000 of these stick figures is more narrow than a human hair.

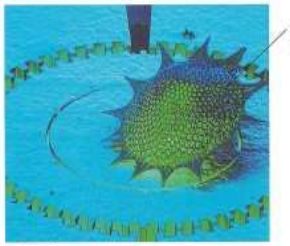

Putting it in context
A plankton skeleton, just 0.008 in (0.2 mm) across, sits on one of the engine's cogs, measuring 0.02 in (0.5 mm).

Top down
Known as "top down," one potential way of building nanomachines is to miniaturize existing machines. There have been some incredible feats, including this fully working electric motor, just 0.07 in (1.8 mm) in size.

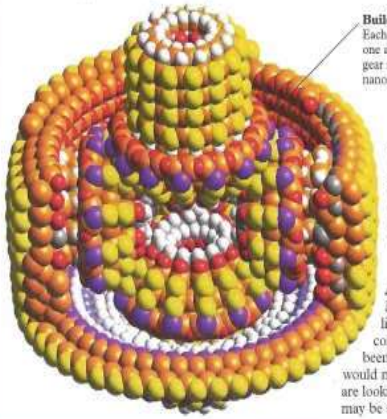

Building atoms
Each ball represents one atom. The whole gear measures just a few nanometers in diameter.

A nanogear
Machines made from individual atoms, like this differential gear, have reached the computer modeling stage, but have not yet been built. For nanotechnology to work, they would need to be made in huge numbers. Scientists are looking to nature for ideas on how nanobots may be self-replicating, like plant and animal cells.

May the force be with you
This nanomanipulator is a big step toward an assembler that can build nanobots from atoms. It uses an atomic force microscope, together with sophisticated handling tools, to manipulate minute particles.

Getting the needle
A hypodermic syringe, less than 0.02 in (0.5 mm) in diameter, would inject nanobots into the blood vessel.

Dishing it up
A communication dish would send and receive instructions and data from a controller outside of the body.

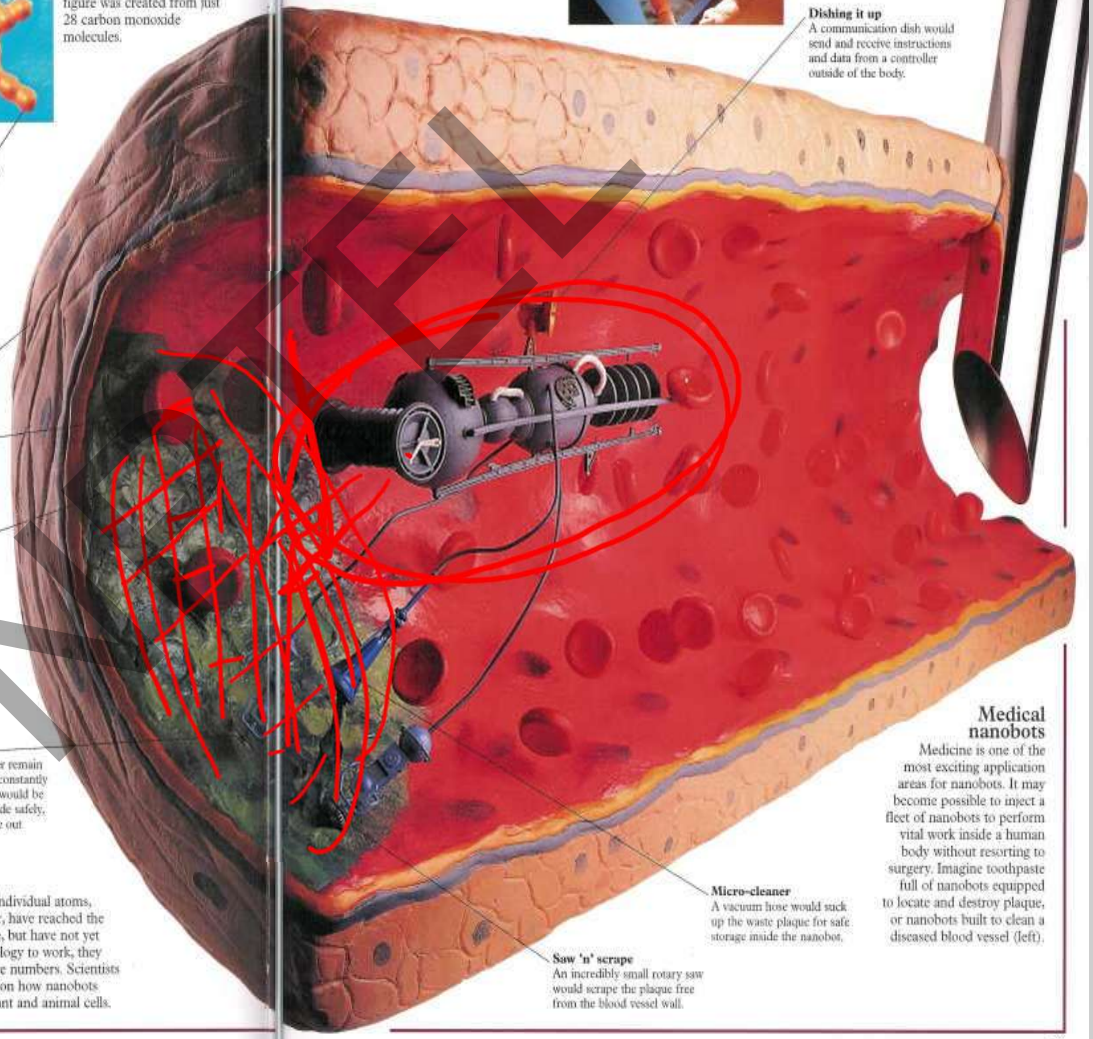

Plaque attack
The diseased section of the blood vessel is covered with a type of plaque containing cholesterol.

Waste away
The nanobot would either remain inside the blood system, constantly performing its task, or it would be programmed to biodegrade safely, carrying the waste plaque out of the human body.

Micro-cleaner
A vacuum hose would suck up the waste plaque for safe storage inside the nanobot.

Saw 'n' scrape
An incredibly small rotary saw would scrape the plaque free from the blood vessel wall.

Medical nanobots
Medicine is one of the most exciting application areas for nanobots. It may become possible to inject a fleet of nanobots to perform vital work inside a human body without resorting to surgery. Imagine toothpaste full of nanobots equipped to locate and destroy plaque, or nanobots built to clean a diseased blood vessel (left).

NPTEL

Micro-robot Dentist !

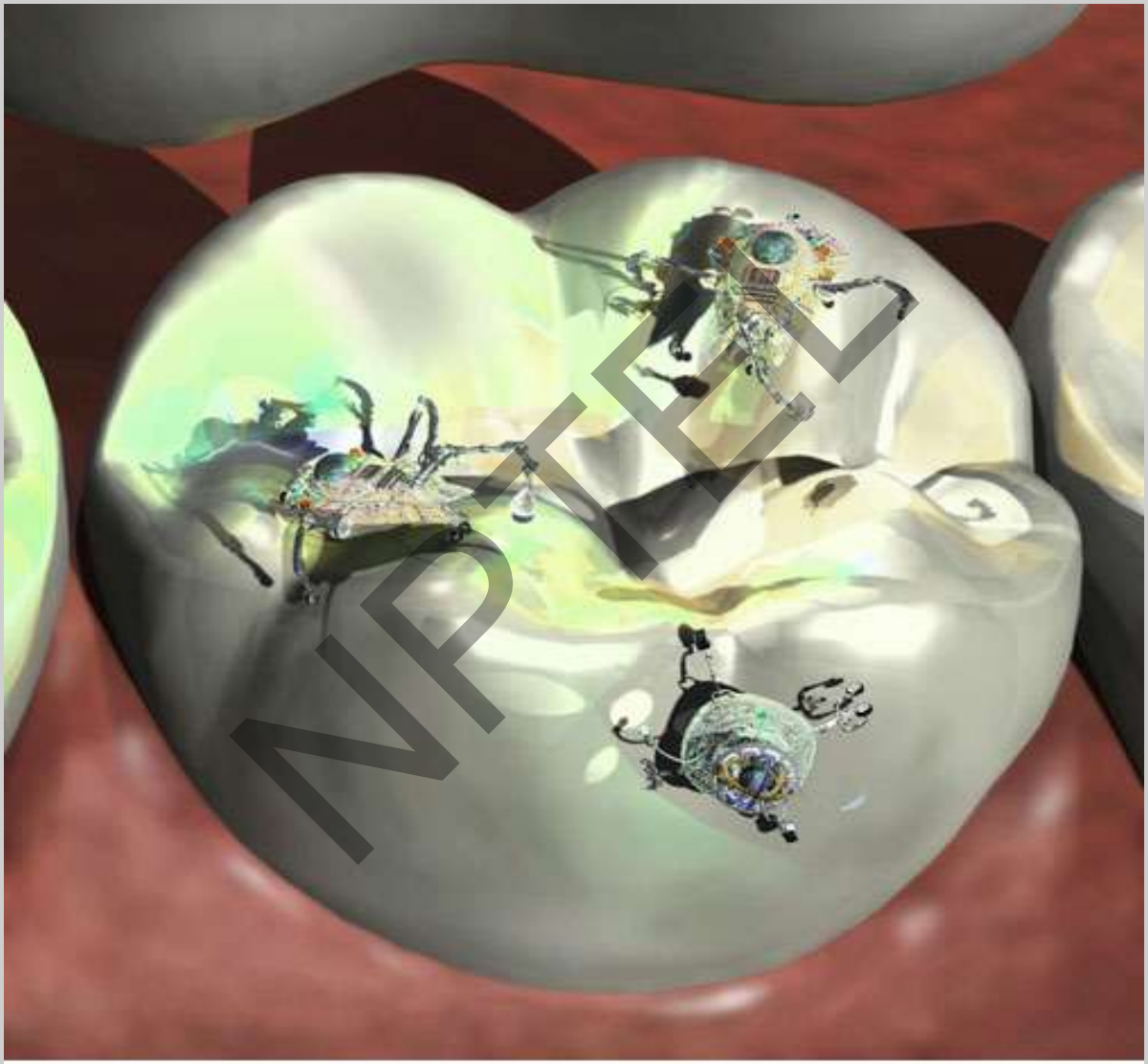

Copyright 2001 American Dental Association

NPTEL

Micro Robotic Hair Cut !

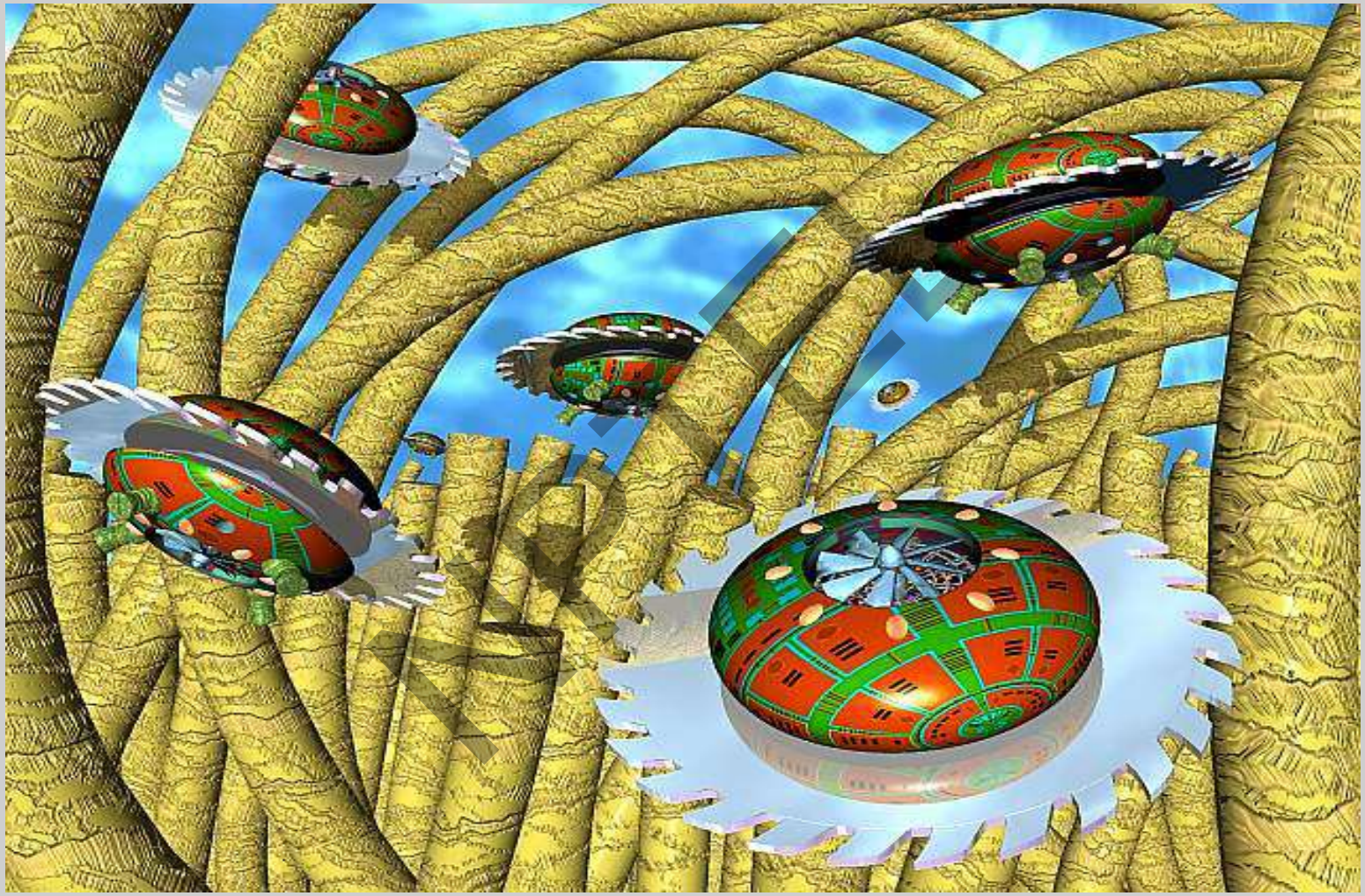

Hand with no joints : Artificial muscles

- Five finger hand with artificial muscles (EAP)

NPTEL

Robots for rehabilitation

wearable robots

Fig. HAL (Human assistive locomotion) Univ. of Tsukuba, Japan

NPTEL

Intelligence? → human attribute

Enter AI

NPTEL

Robotics and AI - movies??

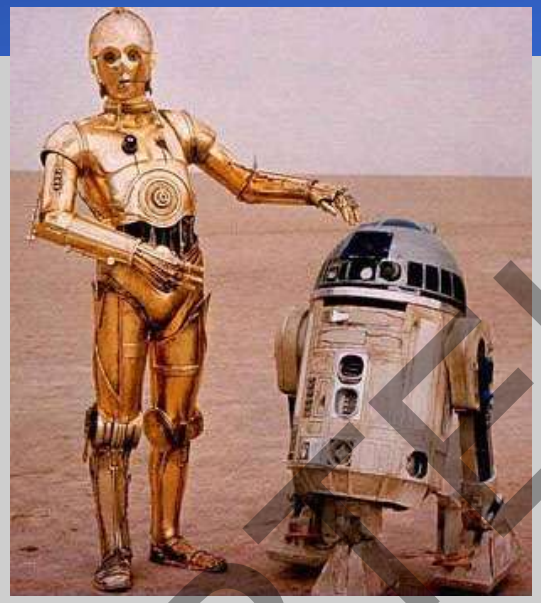

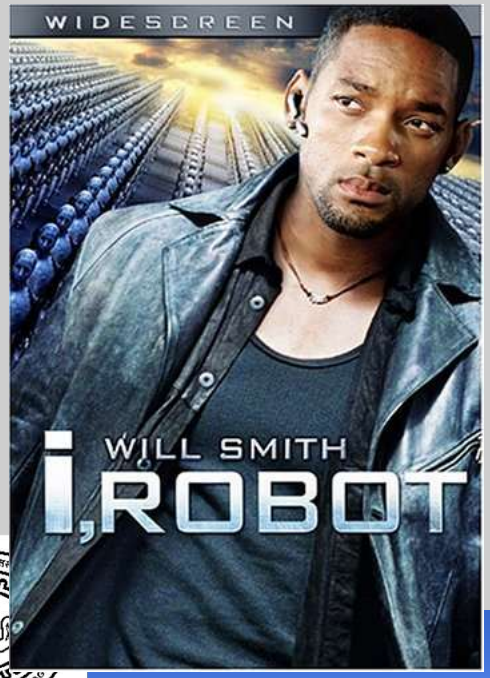

NPTEL

What is AI?

Robots

Systems that think like humans	Systems that think rationally
Systems that act like humans	Systems that act rationally

NPTEL

AI prehistory

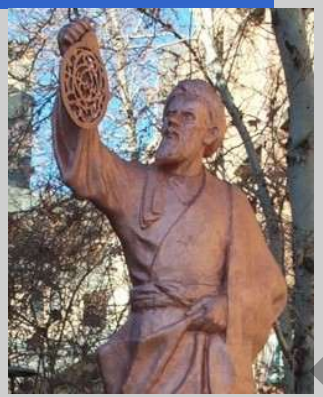

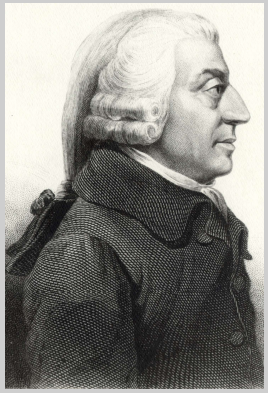

Philosophy (from -350, Aristotle)
foundations of learning, language, rationality

Mathematics (from 825, Al-Khw¯arizm¯ı)
formal logics, proof theory
algorithms, computation, (un)decidability, (in)tractability
Probability

Economics (from 1776, Adam Smith)
Utility, rational decision theory, Operation research, ...

NPTEL

AI prehistory (cont.)

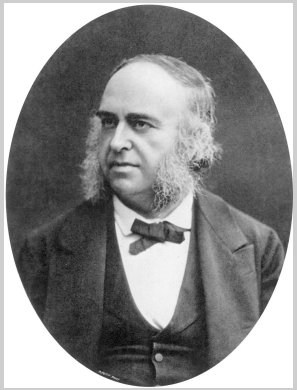

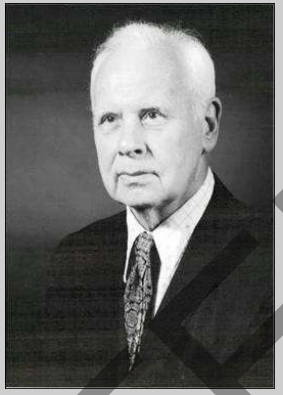
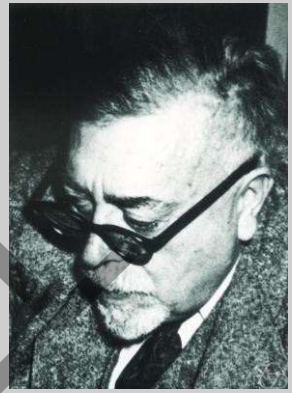
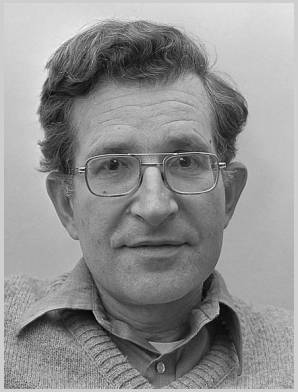

Neuroscience (from 1861 Broca)

Psychology (from 1879, Wundt)

Computer Science (from 1940, Stibitz)

Control theory (from 1948, Wiener)

Linguistics (from 1957, Chomsky)

Robotics (1970 , Rodny Brooks)

NPTEL

What is Artificial Intelligence?

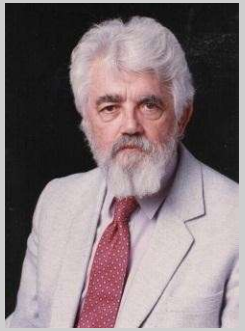

- **What is artificial intelligence?**

It is the science and engineering of making intelligent machines, especially intelligent computer programs. It is related to the similar task of using computers to understand human intelligence, but AI does not have to confine itself to methods that are biologically observable.

- **Yes, but what is intelligence?**

Intelligence is the computational part of the ability to achieve goals in the world. Varying kinds and degrees of intelligence occur in people, many animals and some machines.

NPTEL

- **Isn't there a solid definition of intelligence that doesn't depend on relating it to human intelligence?**

Not yet.

The problem is that we cannot yet characterize in general what kinds of computational procedures we want to call intelligent. We understand some of the mechanisms of intelligence and not others.

NPTEL

Turing Test

- To check machines and humans apart
- How to check if a robot is intelligent?
- If it can fool a human into thinking that it's a human

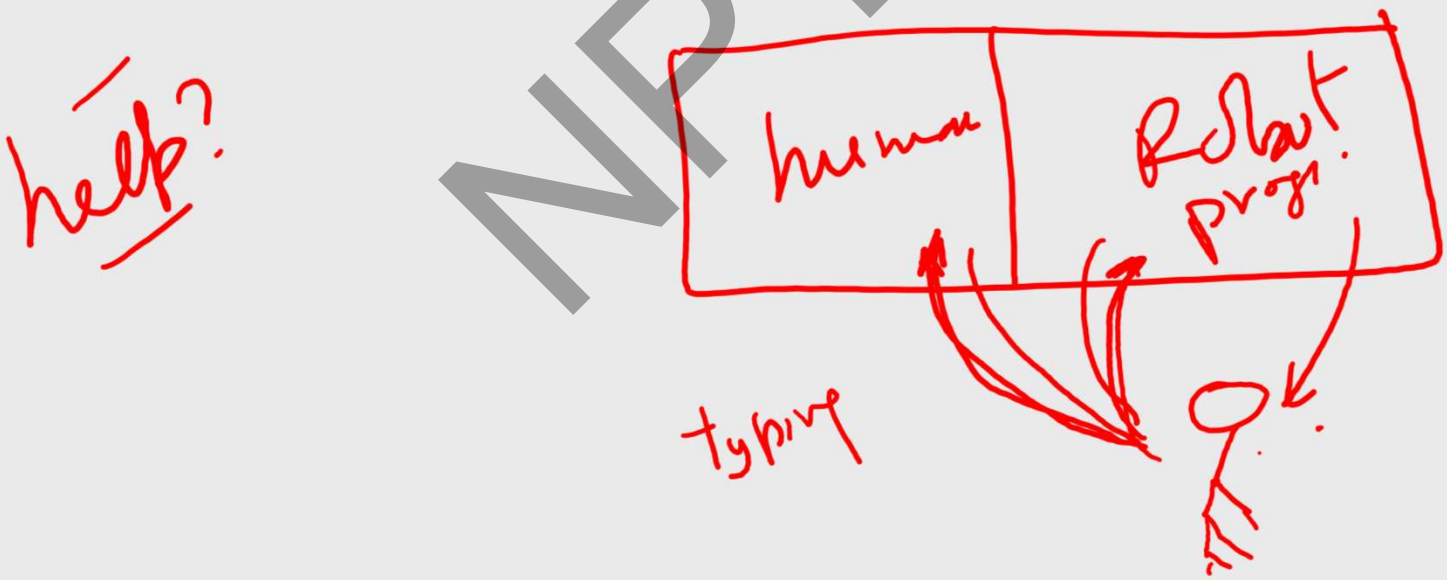

NPTEL

What about machines checking if we are human?

CAPTCHA

What humans can do,
But computers can not.

"**C**ompletely **A**utomated **P**ublic **T**uring Test to Tell **C**omputers and **H**umans **A**part"

NPTEL

What kinds of CAPTCHAS exist?

- **Gimpy** – a text-based CAPTCHA

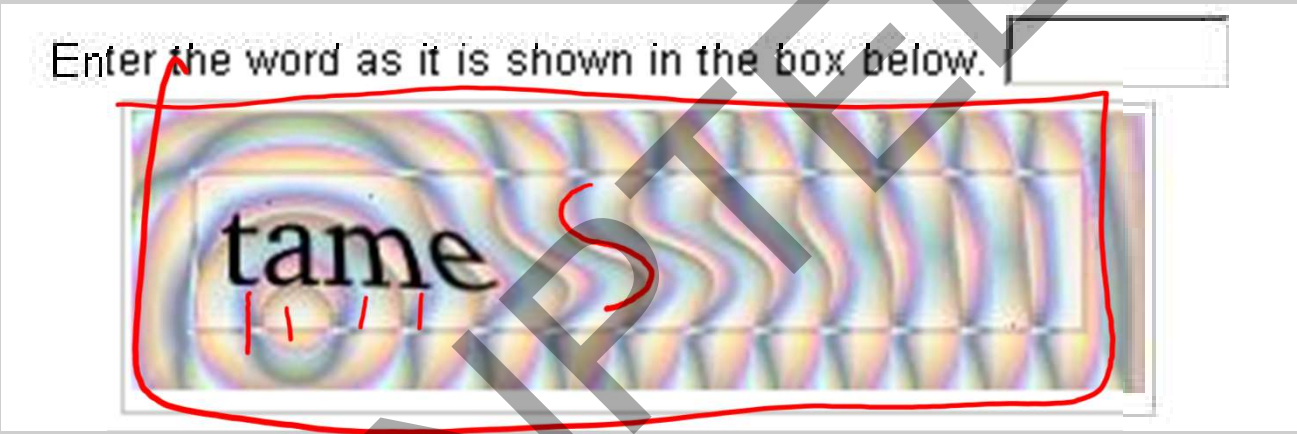

NPTEL

Automobile industry: Autonomous cars

Characteristics of industrial revolutions:
The vendor change

Nevada issued Google a license: the world's first driverless car to drive on public streets (2012)

latest version of Google's self driving car (Huffington Post, 28.5.2014)

first sightings of the iCar (?) in New York and San Francisco (16.2.2015)

Apple Inc.

Ford 021C concept car 2012, designed by Newson now at Apple (1999)

Car specialists? – No. Connectivity & data specialists.

around 1750

1st industrial revolution
Mechanical production systematically using the power of water and steam

around 1900

Power revolution
Centralized electric power infrastructure; mass production by division of labor

around 1970

Digital revolution
Digital computing and communication technology, enhancing systems' intelligence

today

Information revolution
Everybody and everything is networked – networked information as a "huge brain"

NPTEL

Quadruped – Big Dog

NPTEL

Biped - Atlas

Robot Joints and work volume

NPTEL

Dr. Ashish Dutta
Professor, Dept. of Mechanical Engineering
IIT Kanpur, INDIA

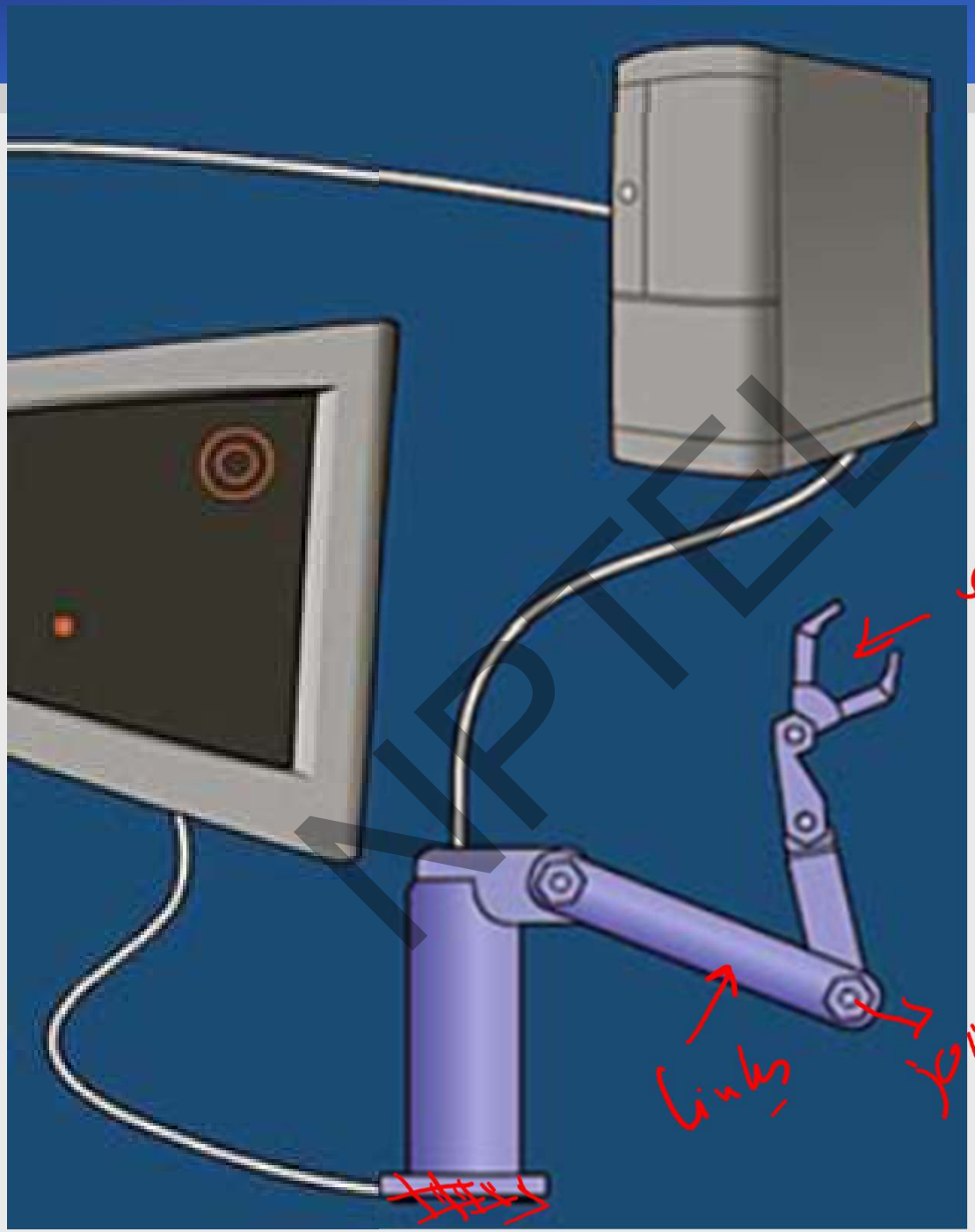

- Serial
- parallel

end effect...
gripper / Tool.

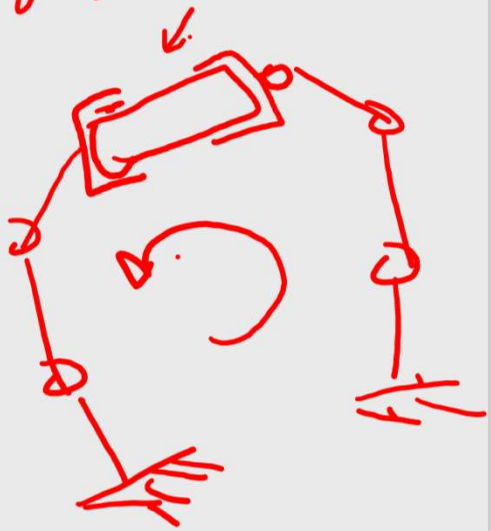

NPTEL

Degrees of Freedom: DOF ?

- Degrees of Freedom of a rigid body , freely floating in space. 2D, 3D, 4D,……N D?

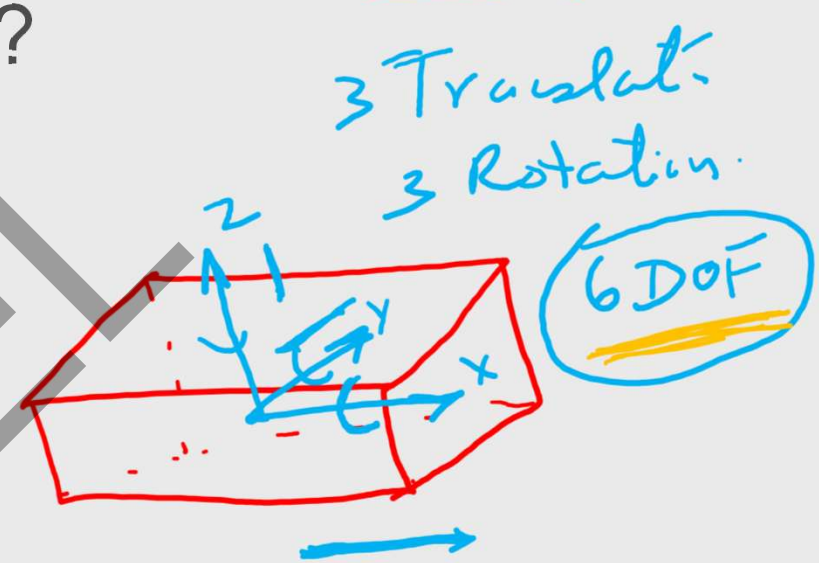

NPTEL

Prismatic joint : DOF 1

P

x

Translating jt.

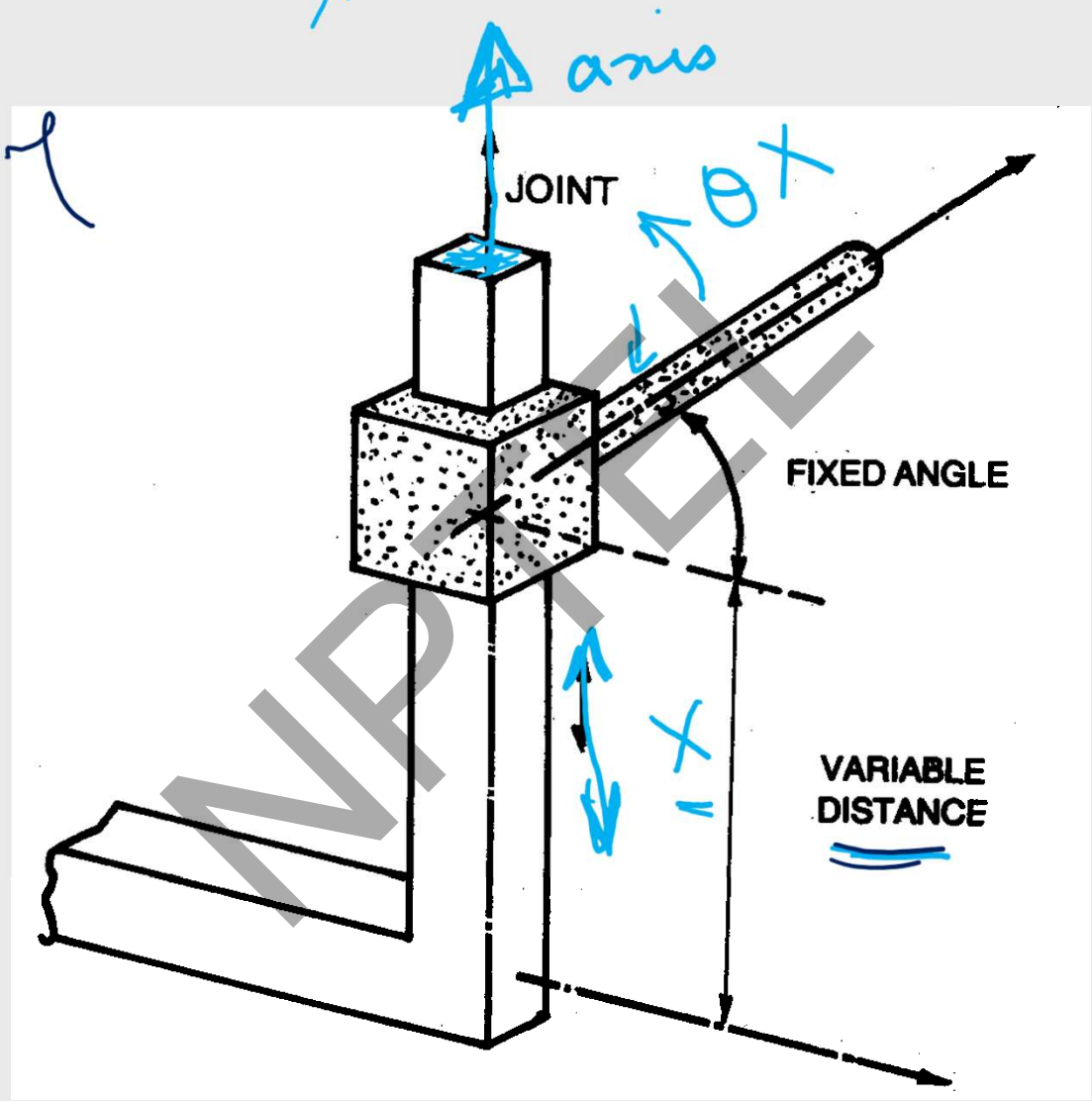

NPTEL

Revolute (DOF 1) / Cylindrical joint (DOF 2)

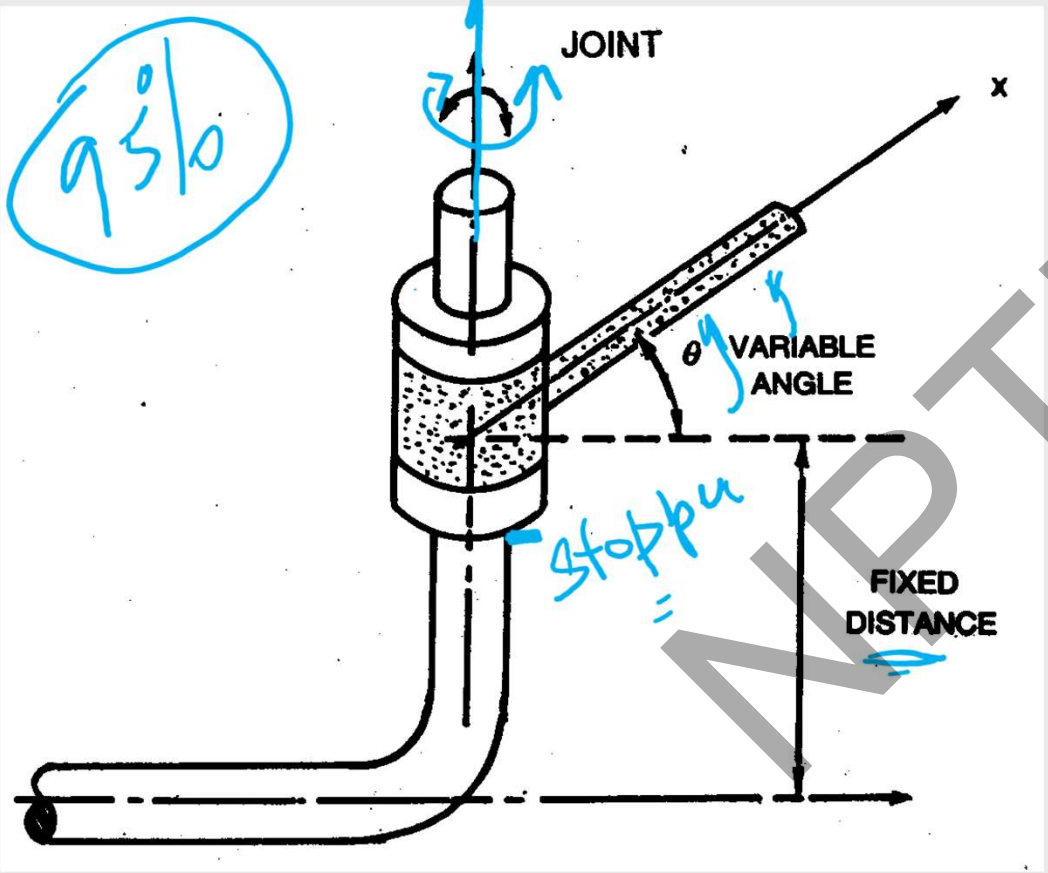

Fig. Revolute

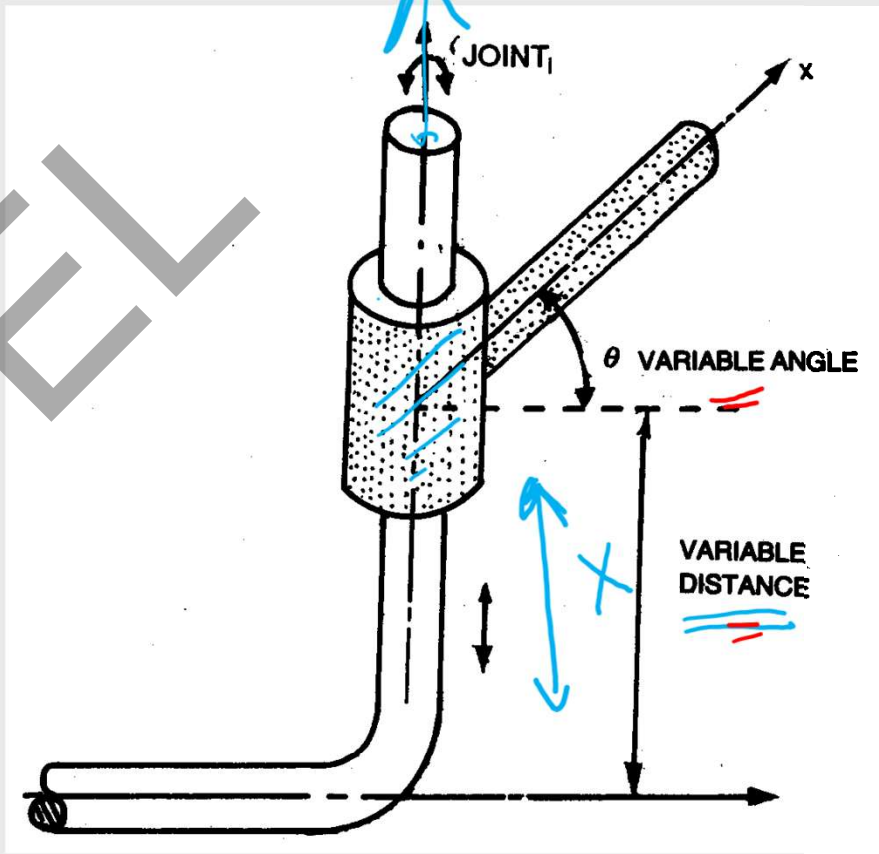

Fig. Cylindrical

NPTEL

Spherical joint : DOF 3

3θ's

ball and socket jt.

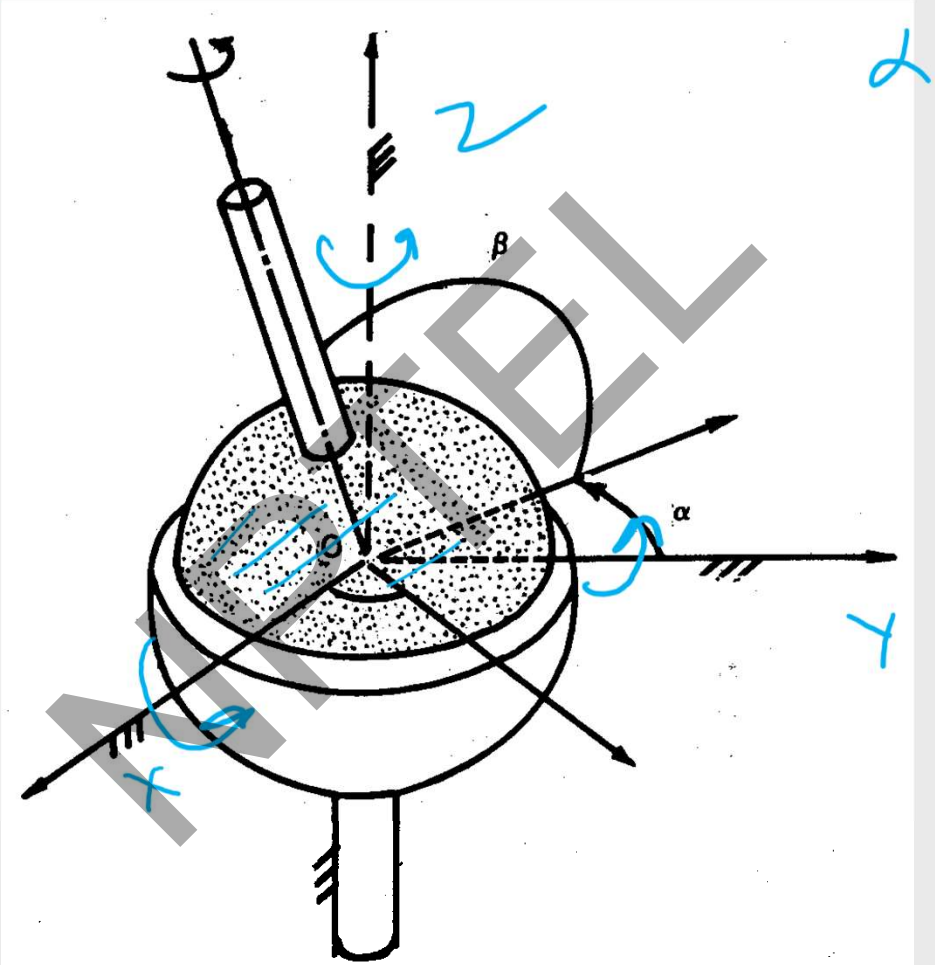

α β γ

3 DOF

3θ's

MODEL

Work Volume

- How many DOF must a robot have – it depends on the task .
- Work Volume: Volume inside which the robot can position its gripper.
- The job to be performed must be inside the work volume.

NPTEL

Pick up an object from the table – how many DOF ?

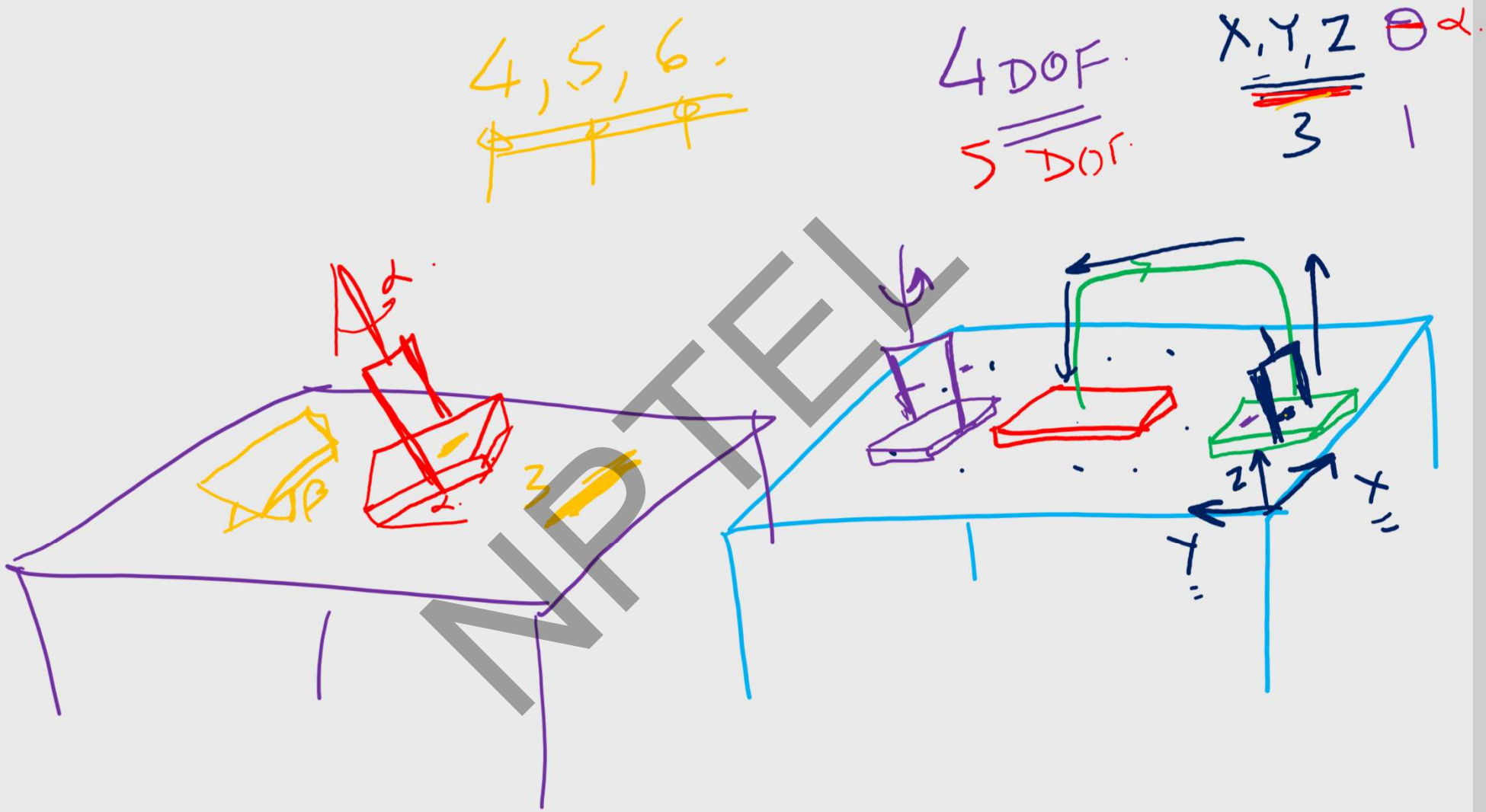

NPTEL

① how many DOF?

cylinder?

② ball

how many DOF?

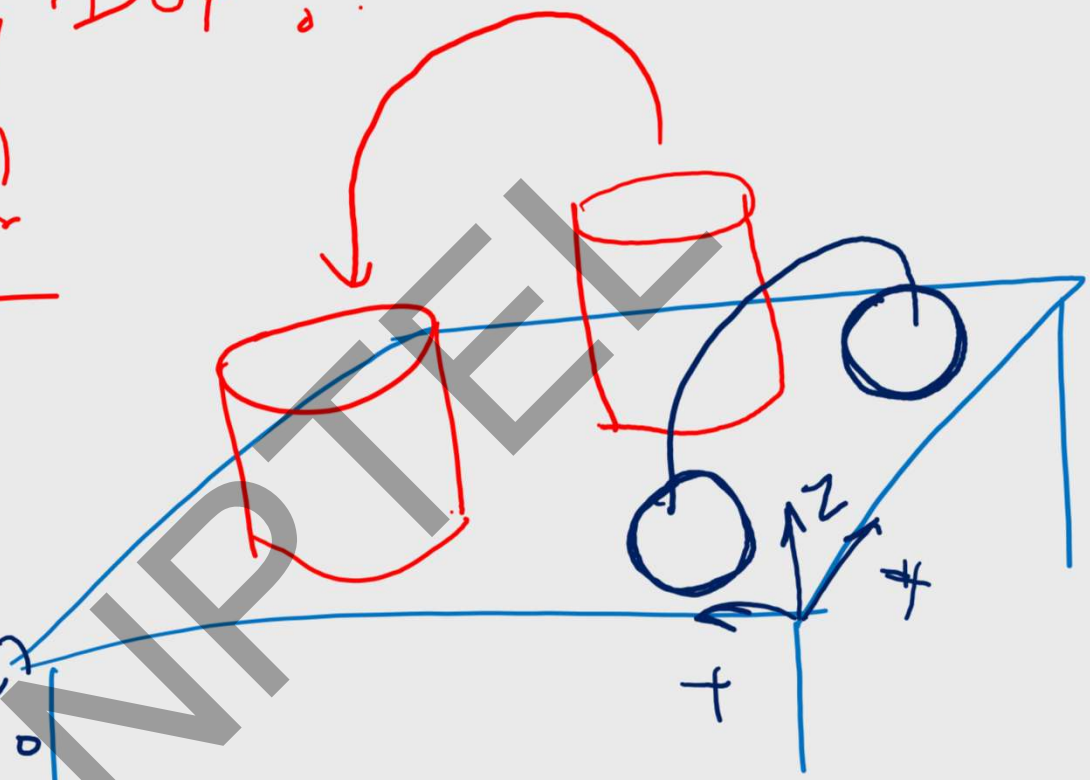

NPTEL

Cartesian robot

3 DOF 3P.

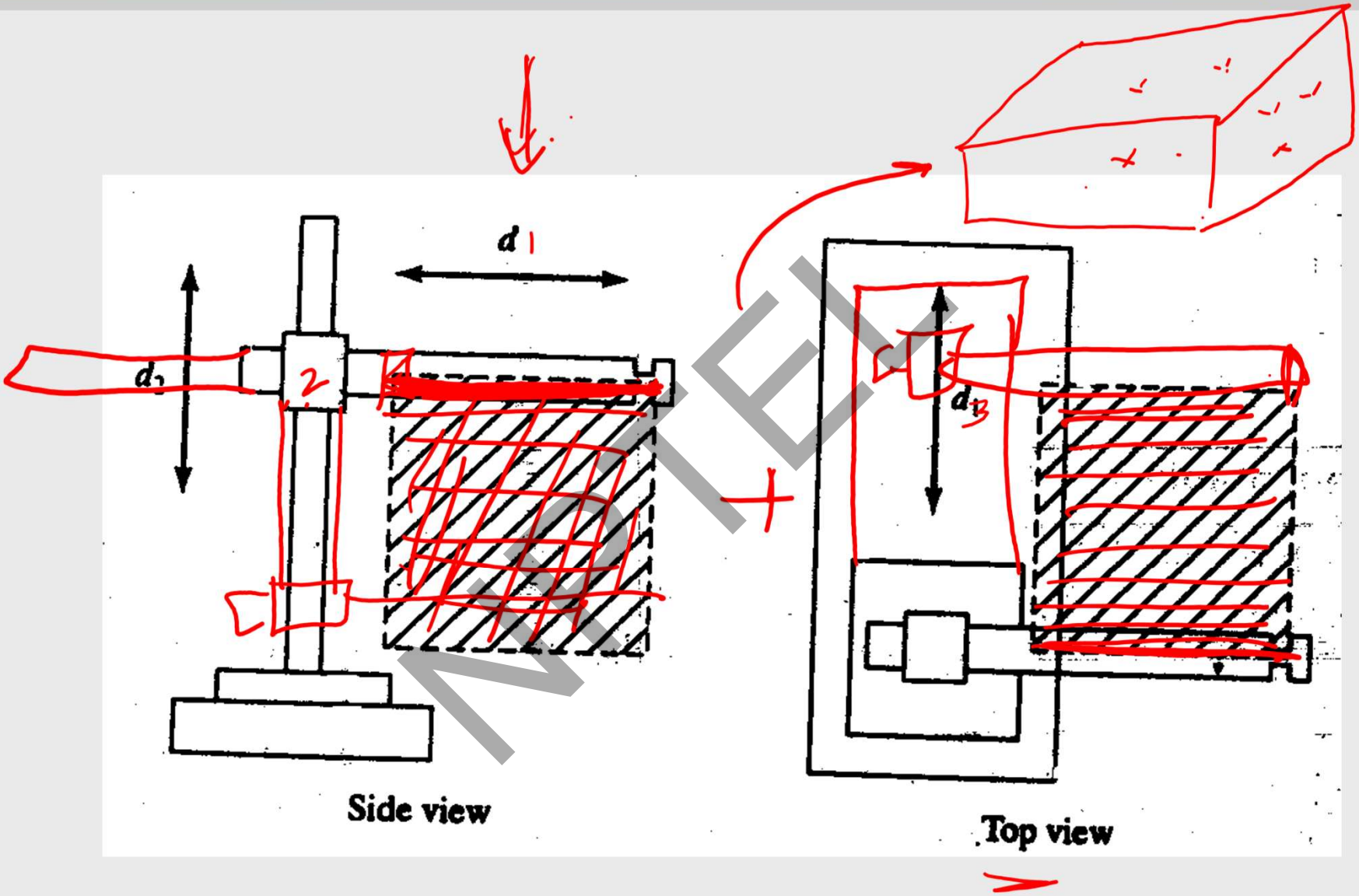

NPTEL

Cylindrical robot

ZPIR

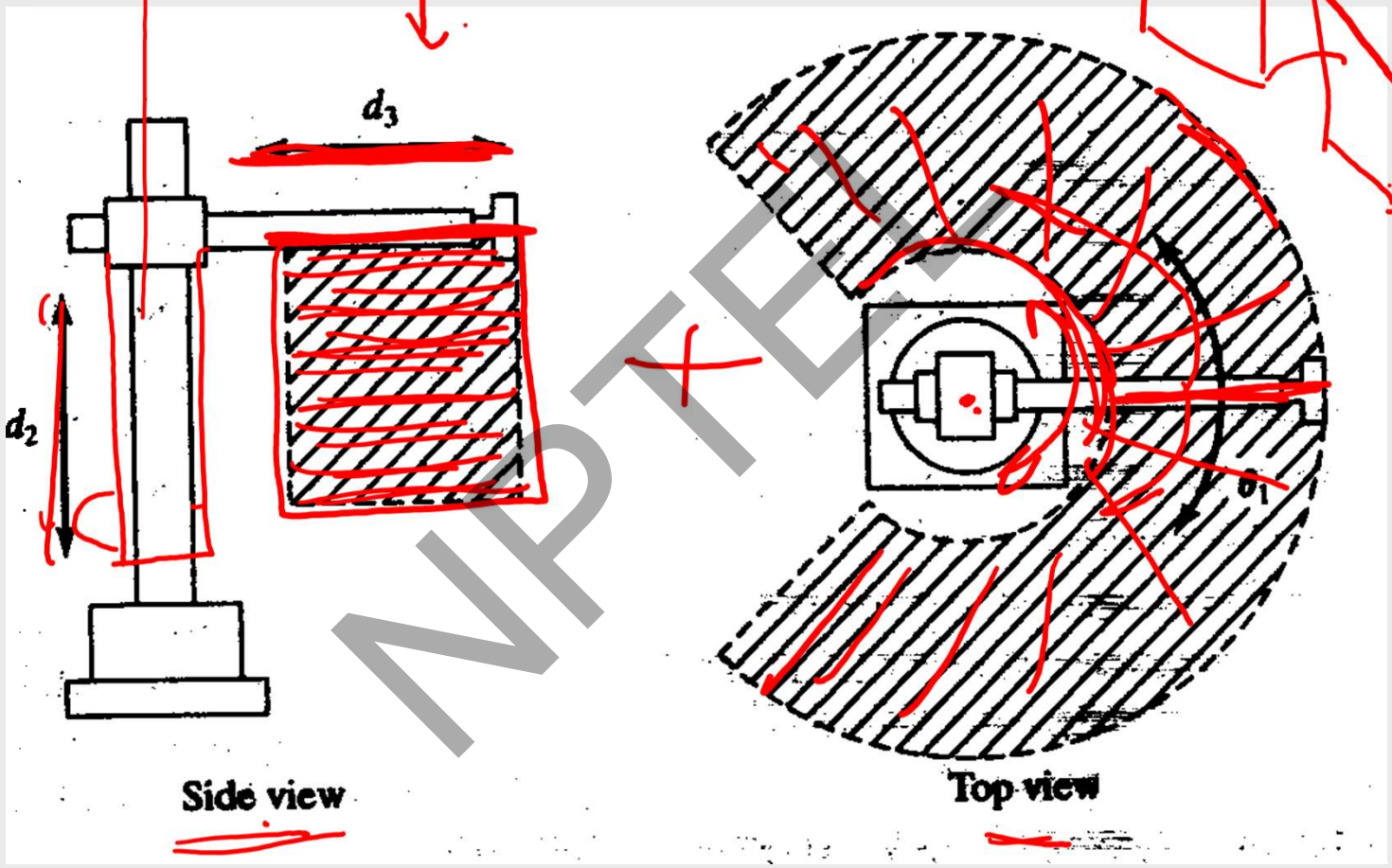

NPTEL

2 DOF planer arm

2R

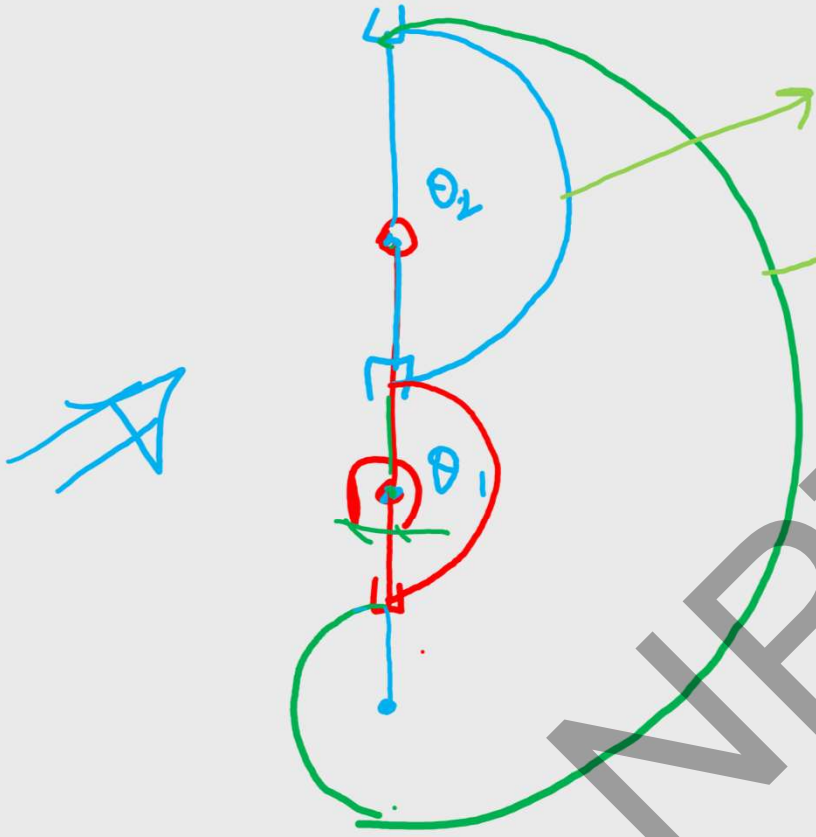

2 circles

1 circle.

θ_1, θ_2 $0 \to 180^\circ$

(i) θ_2 $0 \to 180^\circ$

(ii) θ_1 $0 - 180^\circ$

(iii) fully stretched.

$\theta_1 \to 0 - 180^\circ$

NPTEL

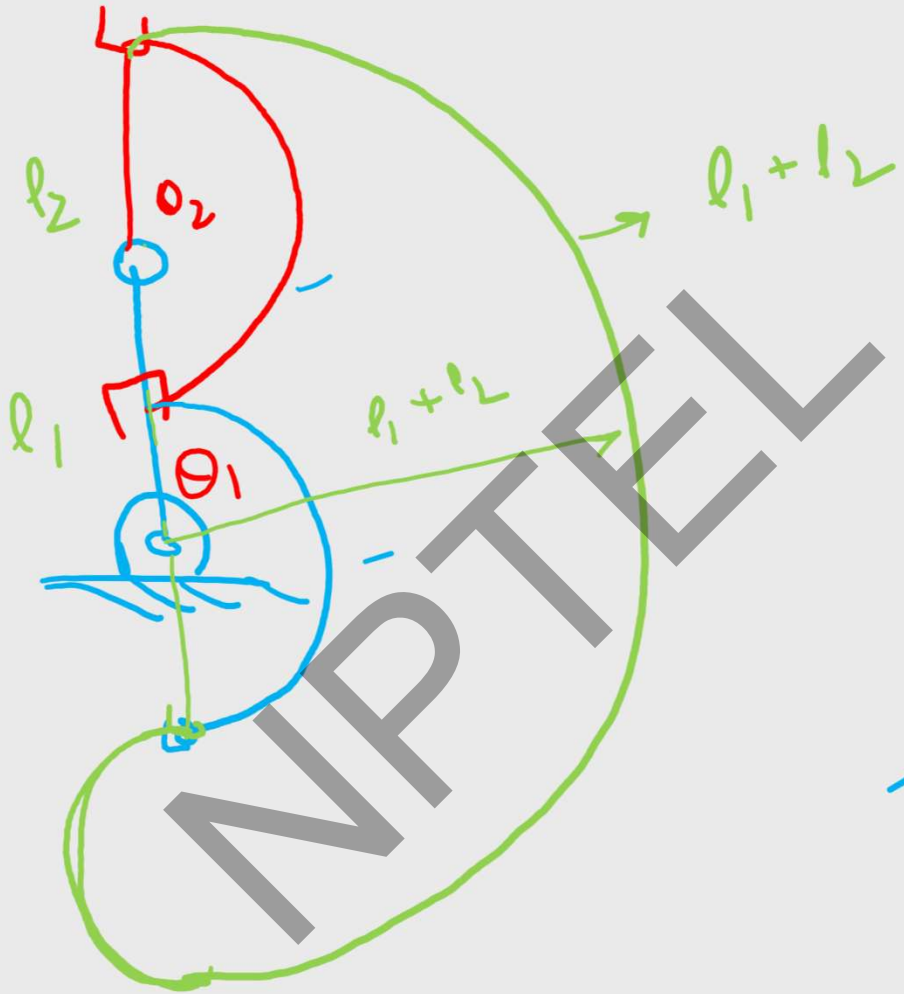

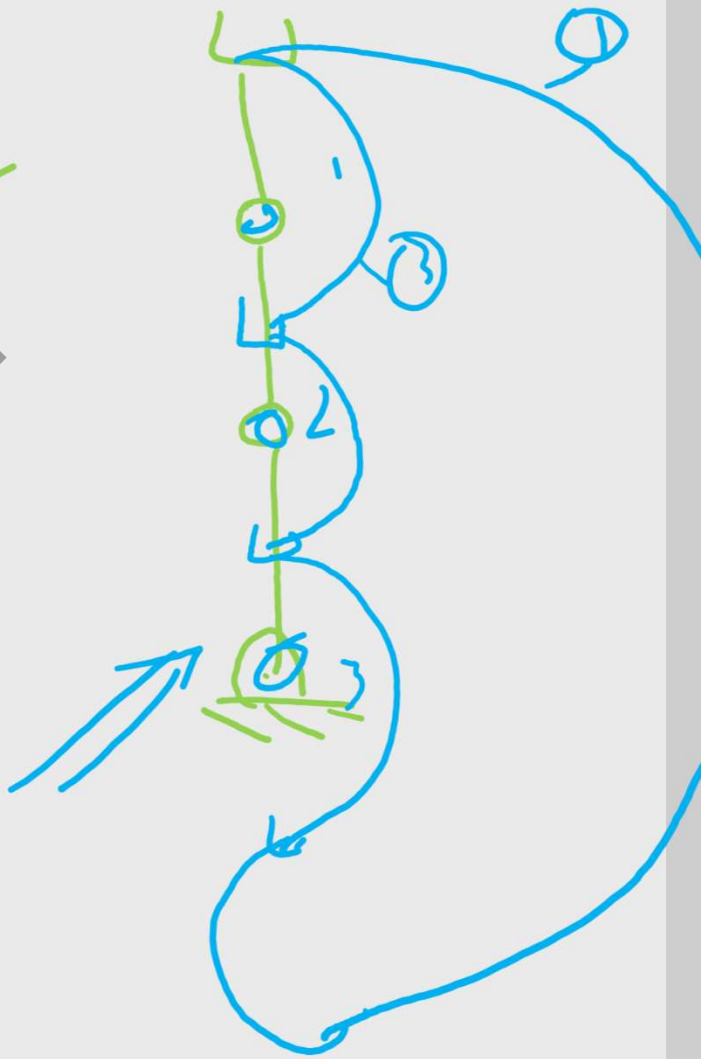

NPTEL

Articulated

4 DOF 4R.

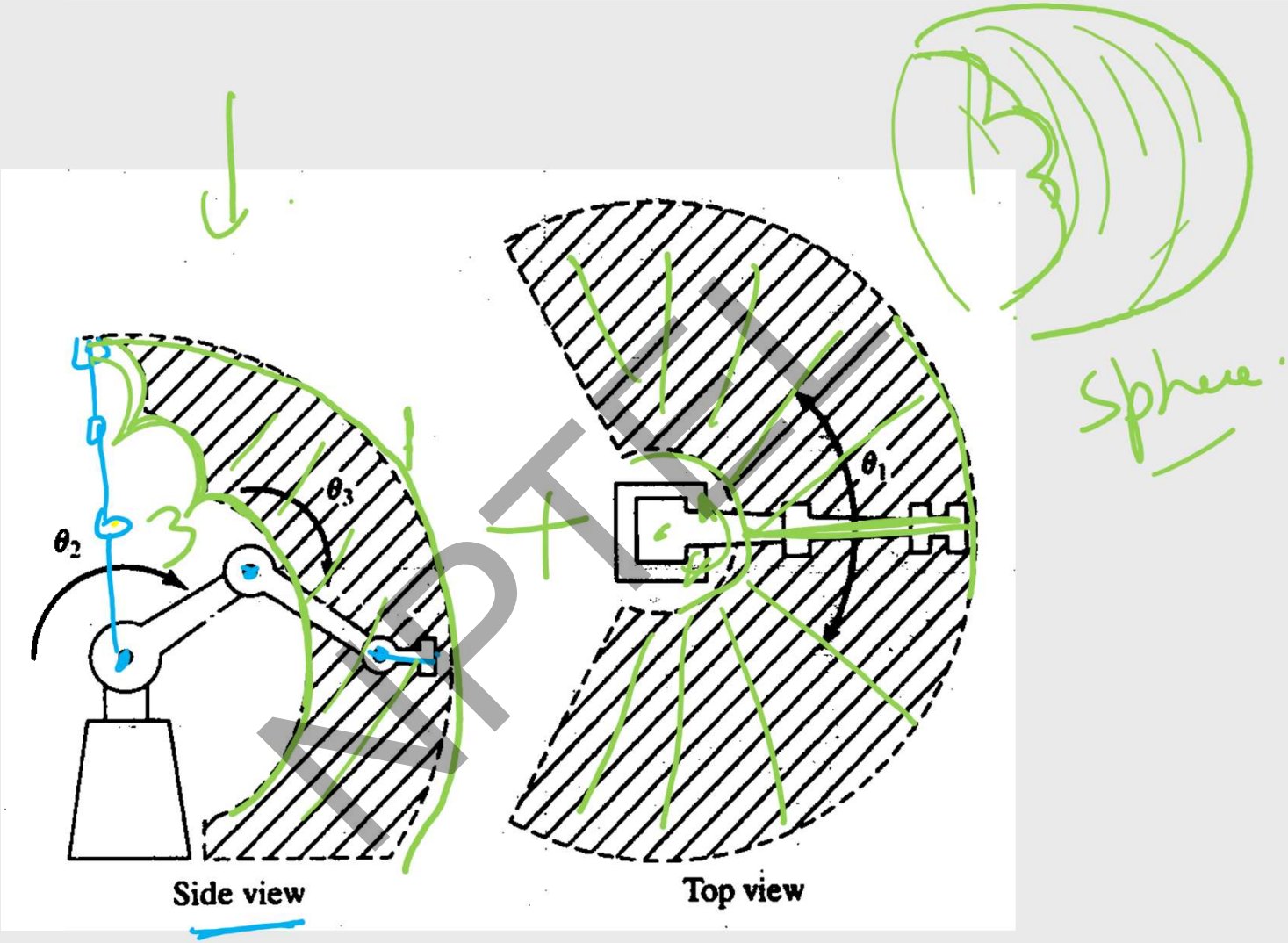

SCARA

Selective Compliance assembly robot

arm. 4DOF 3RIP.

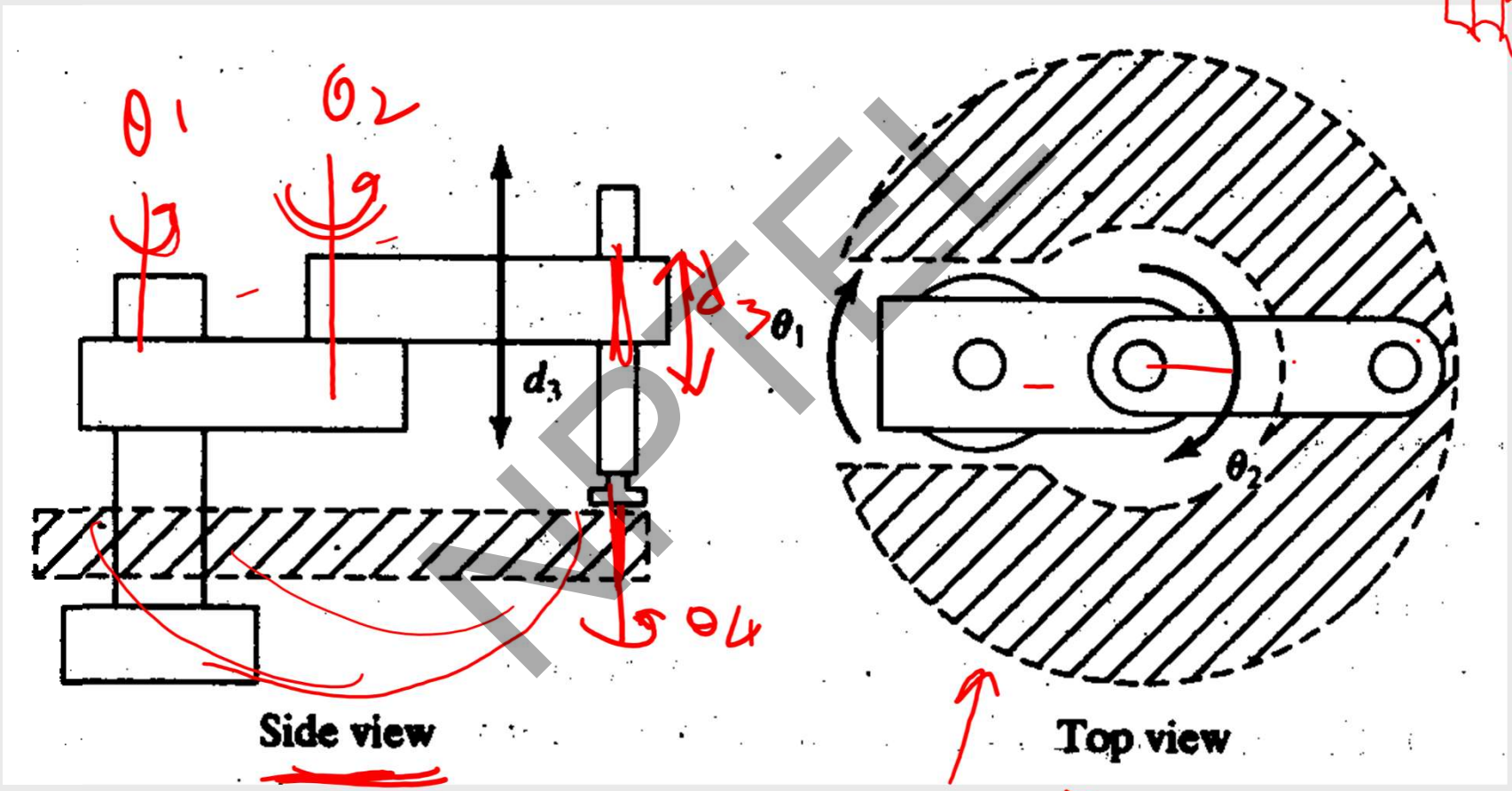

NPTEL

How to decide

- What should be the link lengths of a robot? (what are the link lengths for humans ??)
- Link velocities during control ??

NPTEL

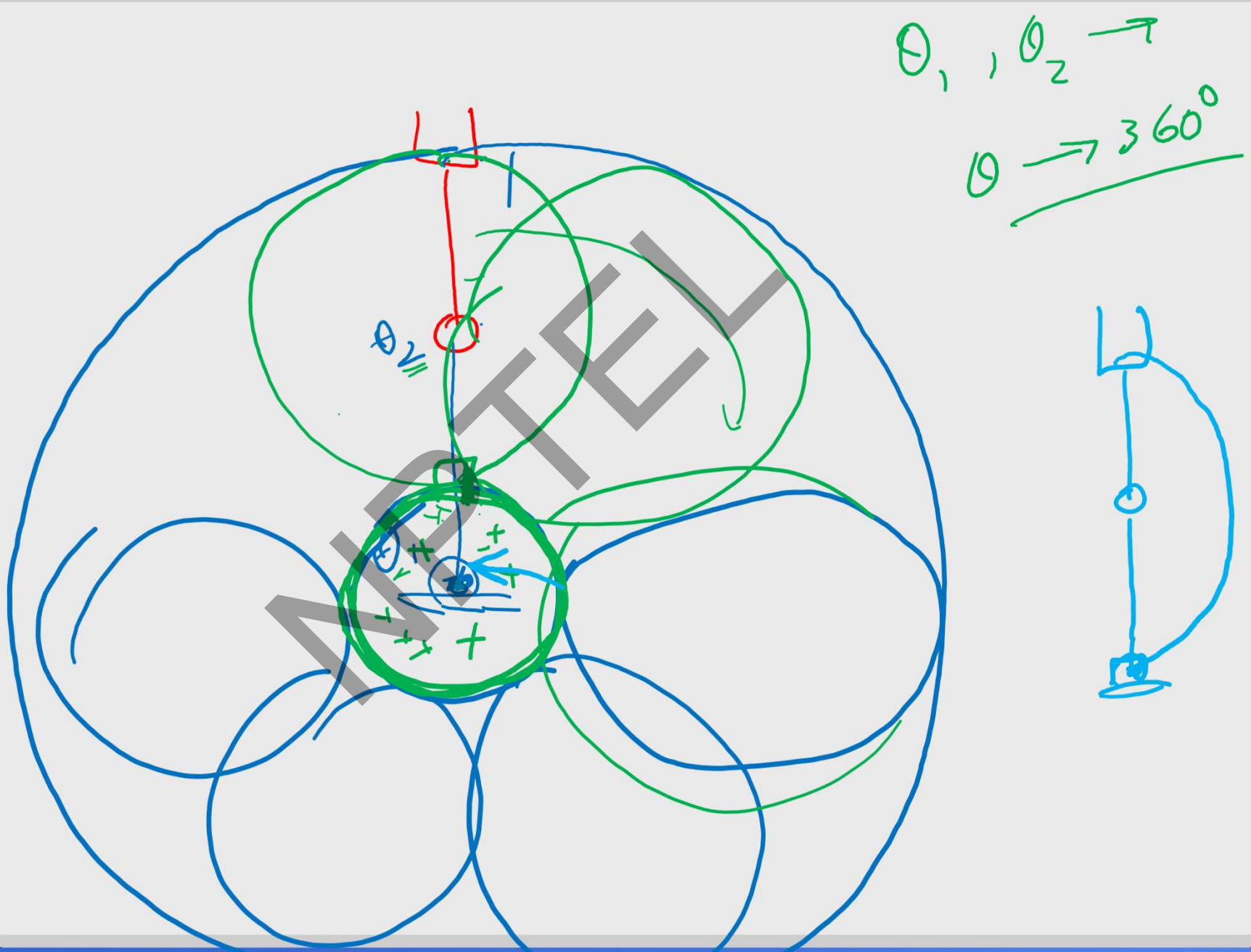

NPTEL

$l_1 = l_2$

$\frac{l_1}{l_2} = 1 = a$

* link lengths are equal

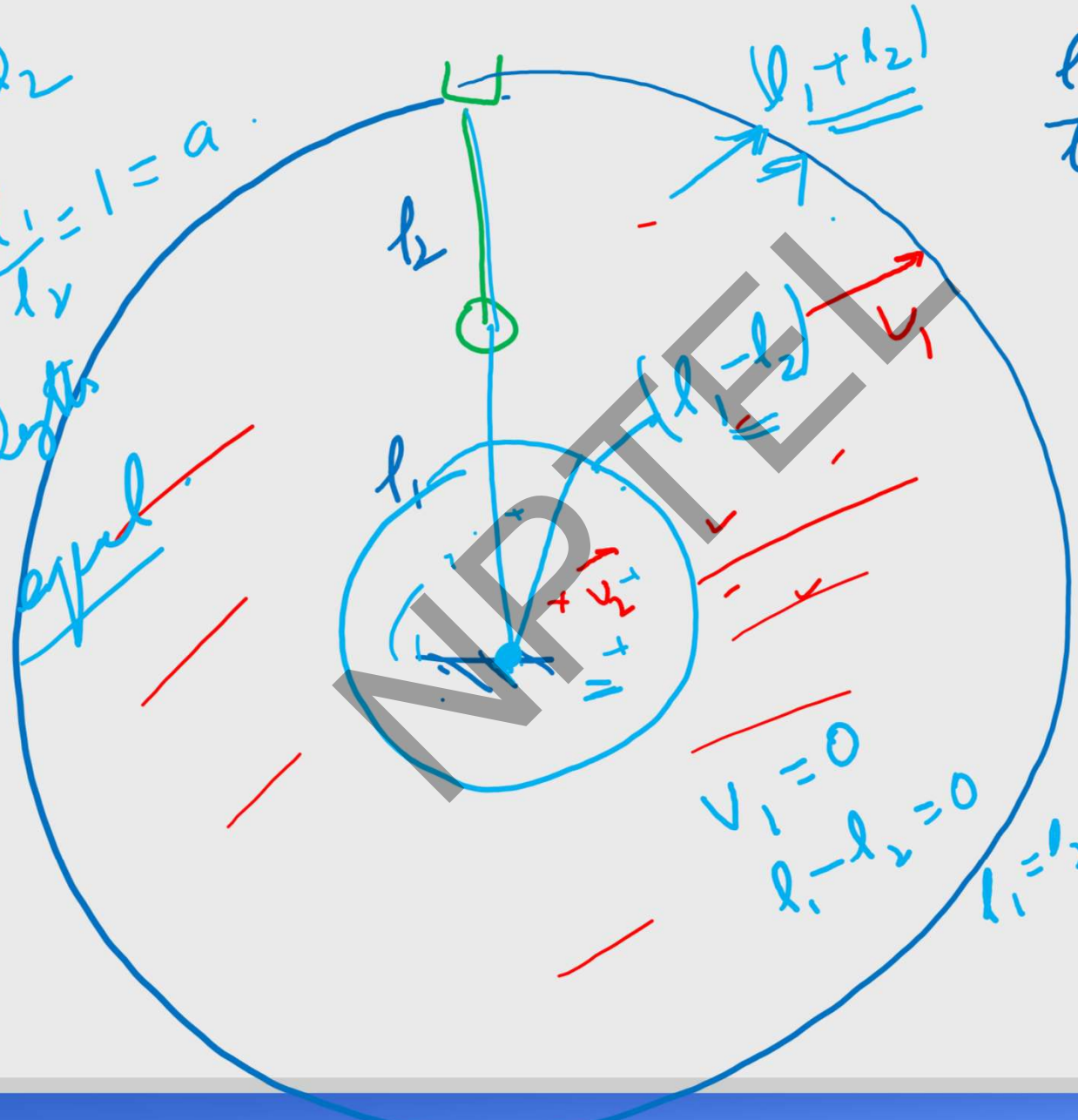

$V_1 = 0$

$l_1 - l_2 = 0$

$l_1 = l_2$

$\frac{l_1}{l_2} = a$?

$\Rightarrow l_1 = a l_2$

Max area?

$V = V_1 - V_2$

$V = \pi (l_1+l_2)^2 - \pi (l_1-l_2)^2$

$\uparrow$

$a l_2$

$\frac{dV}{dl_2} = 0.$

NPTEL

Transformations

Prof. Ashish Dutta
Professor, Dept. of Mechanical Engg
IIT Kanpur, India 208016

NPTEL

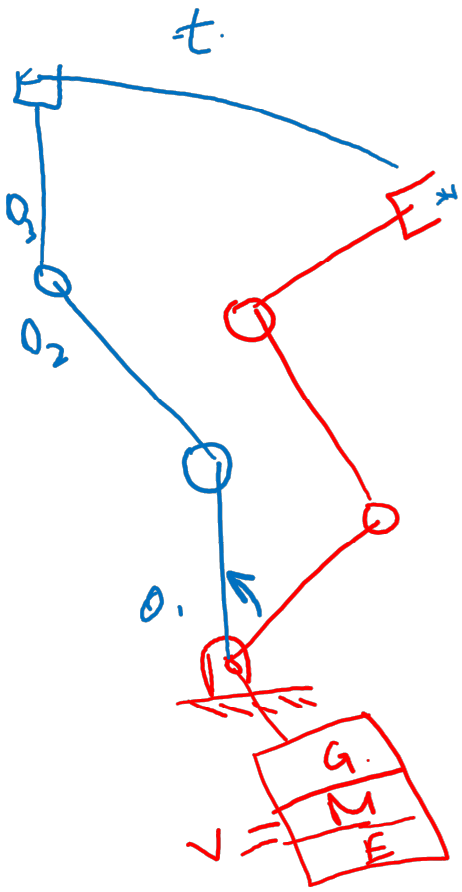

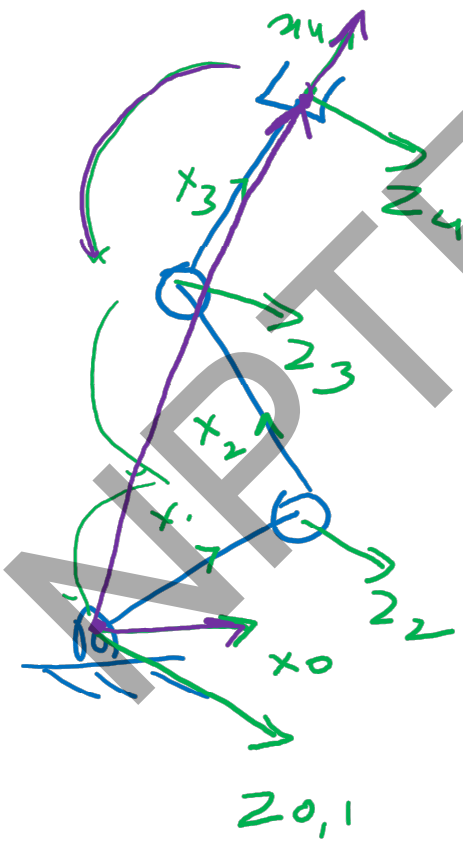

Axis

(i) angle between the axis (4) and (0)

Rotation.

(ii) # Translation between (0) and (4)

NPTEL

- Axis → is a direction in space. X, Y, Z.
- Space → 3D Euclidean space. X Y Z
- orthogonal axis X Y Z.

NPTEL

Rotation Transformation $R_{(z,\theta)}$

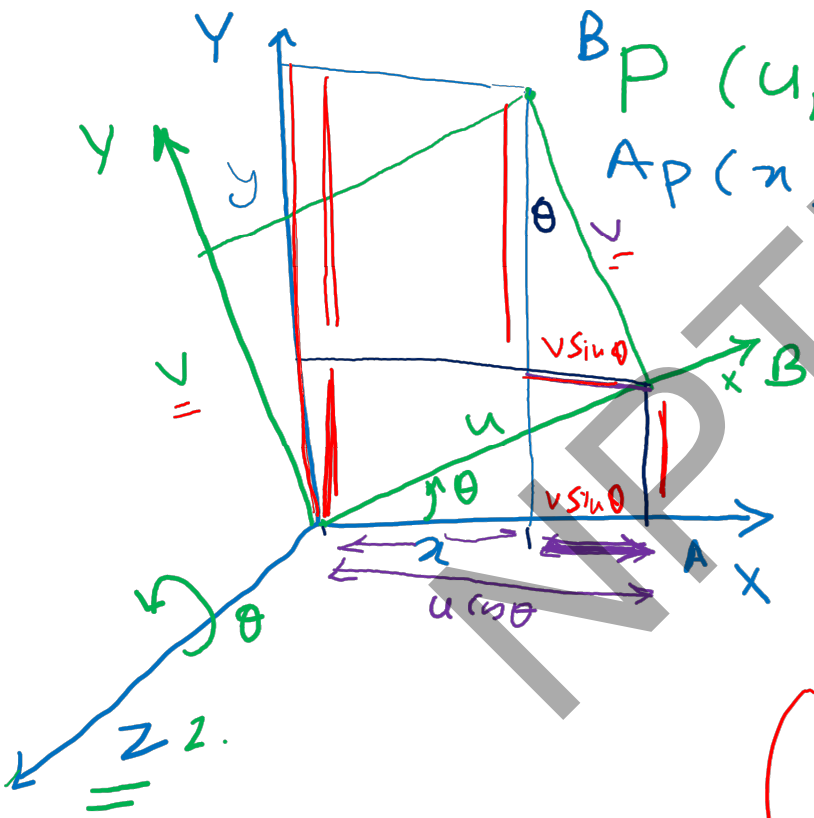

$^{B}P\ (u, v, w)$ Rotated.

$^{A}P\ (x, y, z)$

$$x = u\cos\theta - v\sin\theta$$

$$y = u\sin\theta + v\cos\theta$$

$$z = w$$

$R_{(z,\theta)}$ (3x3)

$$\begin{pmatrix} x \\ y \\ z \end{pmatrix} = \begin{pmatrix} \cos\theta & -\sin\theta & 0 \\ \sin\theta & \cos\theta & 0 \\ 0 & 0 & 1 \end{pmatrix} \begin{pmatrix} u \\ v \\ w \end{pmatrix}$$

NPTEL

$$R_{(z,\theta)} = \begin{array}{c} \begin{array}{ccc} x & y & z \end{array} \\ \begin{pmatrix} \cos\theta & -\sin\theta & 0 \\ \sin\theta & \cos\theta & 0 \\ 0 & 0 & 1 \end{pmatrix} \end{array}$$

$$|x| = |y| = |z| = 1$$

proper orthonormal matrix.

$$R^{-1} = R^{T}$$

$$\det|R| = 1$$

NPTEL

Ex1. A frame 'B' is rotated by 30° about the z axis of fixed frame 'A'. If the coordinate of a point in frame B is given by $^{B}p = (1,1,1)$ what is its coordinate in frame 'A' ^{A}p?

$$^{A}p = (R_{z30})\,^{B}p$$

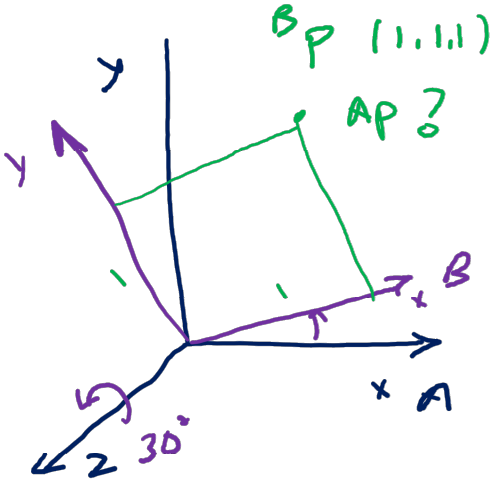

$$\begin{pmatrix} x \\ y \\ z \end{pmatrix} = \begin{pmatrix} \cos 30 & -\sin 30 & 0 \\ \sin 30 & \cos 30 & 0 \\ 0 & 0 & 1 \end{pmatrix} \begin{pmatrix} 1 \\ 1 \\ 1 \end{pmatrix}$$

$$^{A}\begin{pmatrix} x \\ y \\ z \end{pmatrix} = \begin{pmatrix} 0.366 \\ 1.366 \\ 1 \end{pmatrix}$$

NPTEL

Ex2. A frame 'B' is rotated by 30° about z axis of frame 'A'. If the coordinates of a point $^{A}p = (1,1,1)$ what ^{B}p ?

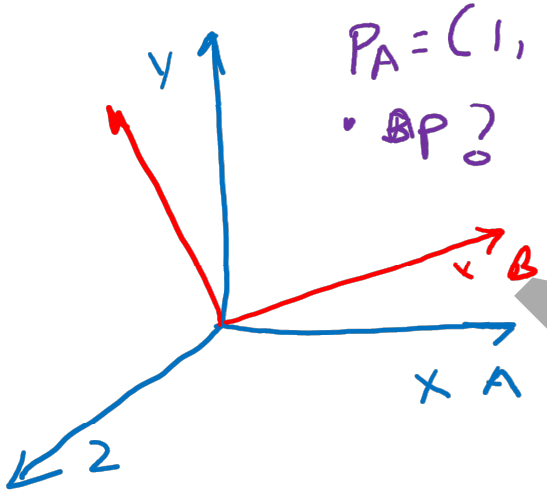

$P_A = (1,1,1)$

^{B}p ?

$$^{A}p = R_{(z,\theta)}\, ^{B}p$$

$$^{B}p = R_{(z,\theta)}^{-1}\, ^{A}p$$

$R^{-1} = R^{T}$

$$^{B}p = \begin{pmatrix} \cos 30 & \sin 30 & 0 \\ -\sin 30 & \cos 30 & 0 \\ 0 & 0 & 1 \end{pmatrix} \begin{pmatrix} 1 \\ 1 \\ 1 \end{pmatrix}$$

$$^{B}p = \begin{pmatrix} 1.366 \\ 0.366 \\ 1 \end{pmatrix}$$

NPTEL

$$R_{(z_1\,\theta)} = \begin{pmatrix} \cos\theta & -\sin\theta & 0 \\ \sin\theta & \cos\theta & 0 \\ 0 & 0 & 1 \end{pmatrix}$$

$$R_{(x_2\,\theta)} = \begin{pmatrix} 1 & 0 & 0 \\ 0 & \cos\theta & -\sin\theta \\ 0 & \sin\theta & \cos\theta \end{pmatrix}$$

$$R_{(y_3\,\theta)} = \begin{pmatrix} \cos\theta & 0 & \sin\theta \\ 0 & 1 & 0 \\ -\sin\theta & 0 & \cos\theta \end{pmatrix}$$

NPTEL